PG161-A00

TU106 6GB GDDR6, 192b, X16

DVI-D/DP + DP + HDMI

TABLE OF CONTENTS

Page	Description
1	Table of Contents
2	Block Diagram
3	PCI Express
4	PCIE RC TERM
5	MEMORY: GPU FB_AB
6	MEMORY: FBA[31:0]
7	MEMORY: FBA[63:32]
8	MEMORY: FBB[31:0]
9	MEMORY: FBB[63:32]
10	MEMORY: GPU FB_CD
11	MEMORY: FBC[31:0]
12	MEMORY: FBC[63:32]
13	MEMORY: FBD[31:0]
14	MEMORY: FBD[63:32]
15	GPU PWR & GND
16	GPU Decoupling
17	GPU Decoupling2
18	IO: IFPAB DVI-D-DL
19	IO: IFPA DP
20	IO: IFPB DP
21	IO: IFPE & IFPF USBC NC
22	IO: IFPC HDMI
23	IO: IFPD DP
24	IO: NVHS Interface and Frame Lock
25	MISC1: Thermal, JTAG, GPIO,STEREO
26	MISC2: ROM, XTAL,STRAPS
27	PS: 1V8_AON
28	PS: 5V
29	PS: PEXVDD
30	PS: FBVDDQ
31	PS: FBVDDQ PH2
32	PS: NVVDD Controller
33	PS: NVVDD Controller OVR3i
34	PS: NVVDD Phase 6,4
35	PS: NVVDD Phase 3,5
36	PS: NVVDD Phase 2,1
37	PS: Input Power Balancing Switcher
38	PS: Input, Filtering, and Monitoring
39	PS: STEERING, UPB & HOT-UNPLUG
40	PS: Type-C BuckBoost
41	PD PPC
42	PS: 12V & 3V3_A SWITCHER
43	SEQ: 5V, 1V8, NV3V3 ENABLE
44	SEQ: NV, PEX, FB ENABLE
45	SEQ: VOLTAGE MONITOR
46	SEQ: DISCHARGE
47	SEQ: MISC
48	LOGO LED
49	LED DRIVER & BOOST
50	FAN
51	PS: Pre-filter
52	MECH
53	PTC

ALL NVIDIA DESIGN SPECIFICATIONS, REFERENCE SPECIFICATIONS, REFERENCE BOARDS, FILES, DRAWINGS, DIAGNOSTICS, LISTS AND OTHER DOCUMENTS OR INFORMATION (TOGETHER AND SEPARATELY, "MATERIALS") ARE BEING PROVIDED "AS IS". THE MATERIALS MAY CONTAIN KNOWN AND UNKNOWN VIOLATIONS OR DEVIATIONS OF INDUSTRY STANDARDS AND SPECIFICATIONS. NVIDIA MAKES NO WARRANTIES, EXPRESSED, IMPLIED, STATUTORY OR OTHERWISE WITH RESPECT TO THE MATERIALS OR OTHERWISE, AND EXPRESSLY DISCLAIMS ALL IMPLIED WARRANTIES INCLUDING, WITHOUT LIMITATION, THE WARRANTIES OF DESIGN, OF NONINFRINGEMENT, MERCHANTABILITY OR FITNESS FOR A PARTICULAR PURPOSE, OR ARISING FROM A COURSE OF DEALING, TRADE USAGE, TRADE PRACTICE, OR INDUSTRY STANDARDS.

ASSEMBLY	<ASSEMBLY_DESCRIPTION>
PAGE DETAIL	Table of Contents

NVIDIA CORPORATION
2701 SAN TOMAS EXPRESSWAY
SANTA CLARA, CA 95050, USA

NV_PN	600-1G161-BASE-000		
PCB REV	PG161-A00	PAGE	1 OF 53
ROM REV	A	DATE	21-OCT-2019

Page2: Block Diagram

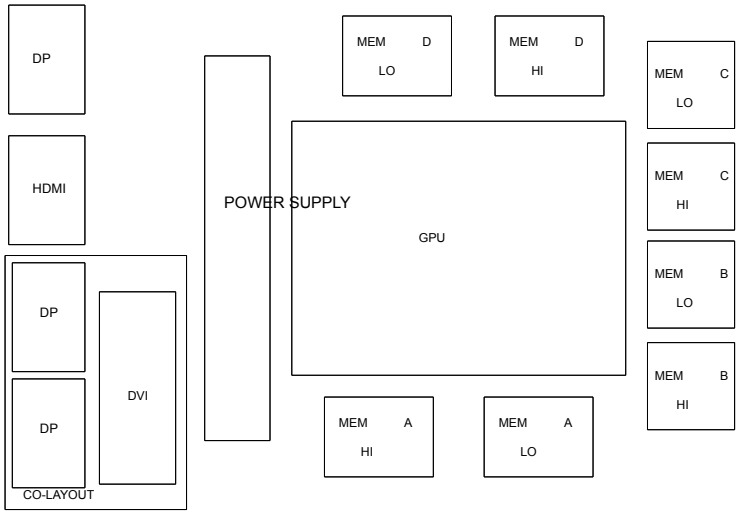

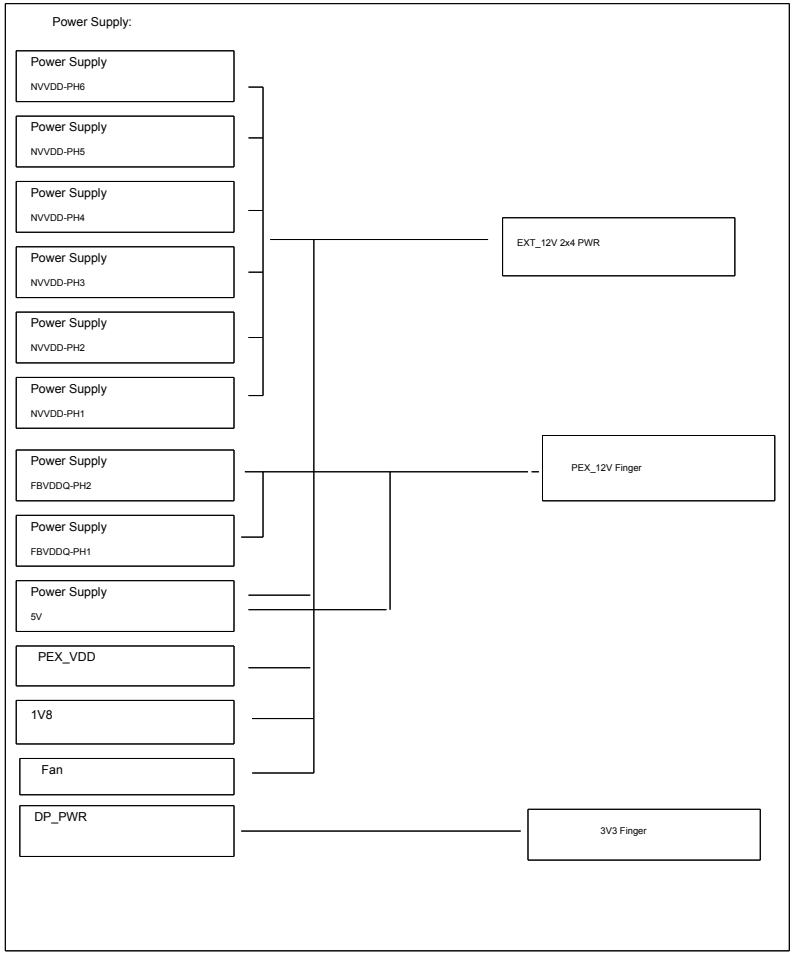

ASSEMBLY	<ASSEMBLY_DESCRIPTION>
PAGE DETAIL	Block Diagram

ALL NVIDIA DESIGN SPECIFICATIONS, REFERENCE SPECIFICATIONS, REFERENCE BOARDS, FILES, DRAWINGS, DIAGNOSTICS, LISTS AND OTHER DOCUMENTS OR INFORMATION (TOGETHER AND SEPARATELY, "MATERIALS") ARE BEING PROVIDED "AS IS". THE MATERIALS MAY CONTAIN KNOWN AND UNKNOWN VIOLATIONS OR DEVIATIONS OF INDUSTRY STANDARDS AND SPECIFICATIONS. NVIDIA MAKES NO WARRANTIES, EXPRESSED, IMPLIED, STATUTORY OR OTHERWISE WITH RESPECT TO THE MATERIALS OR OTHERWISE, AND EXPRESSLY DISCLAIMS ALL IMPLIED WARRANTIES INCLUDING, WITHOUT LIMITATION, THE WARRANTIES OF DESIGN, OF NONINFRINGEMENT, MERCHANTABILITY OR FITNESS FOR A PARTICULAR PURPOSE, OR ARISING FROM A COURSE OF DEALING, TRADE USAGE, TRADE PRACTICE, OR INDUSTRY STANDARDS.

NVIDIA CORPORATION
2701 SAN TOMAS EXPRESSWAY
SANTA CLARA, CA 95050, USA

NV_PN	600-1G161-BASE-000		
PCB REV	PG161-A00	PAGE	2 OF 32
SCM REV	A	DATE	21-OCT-2010

Page3: PCI Express

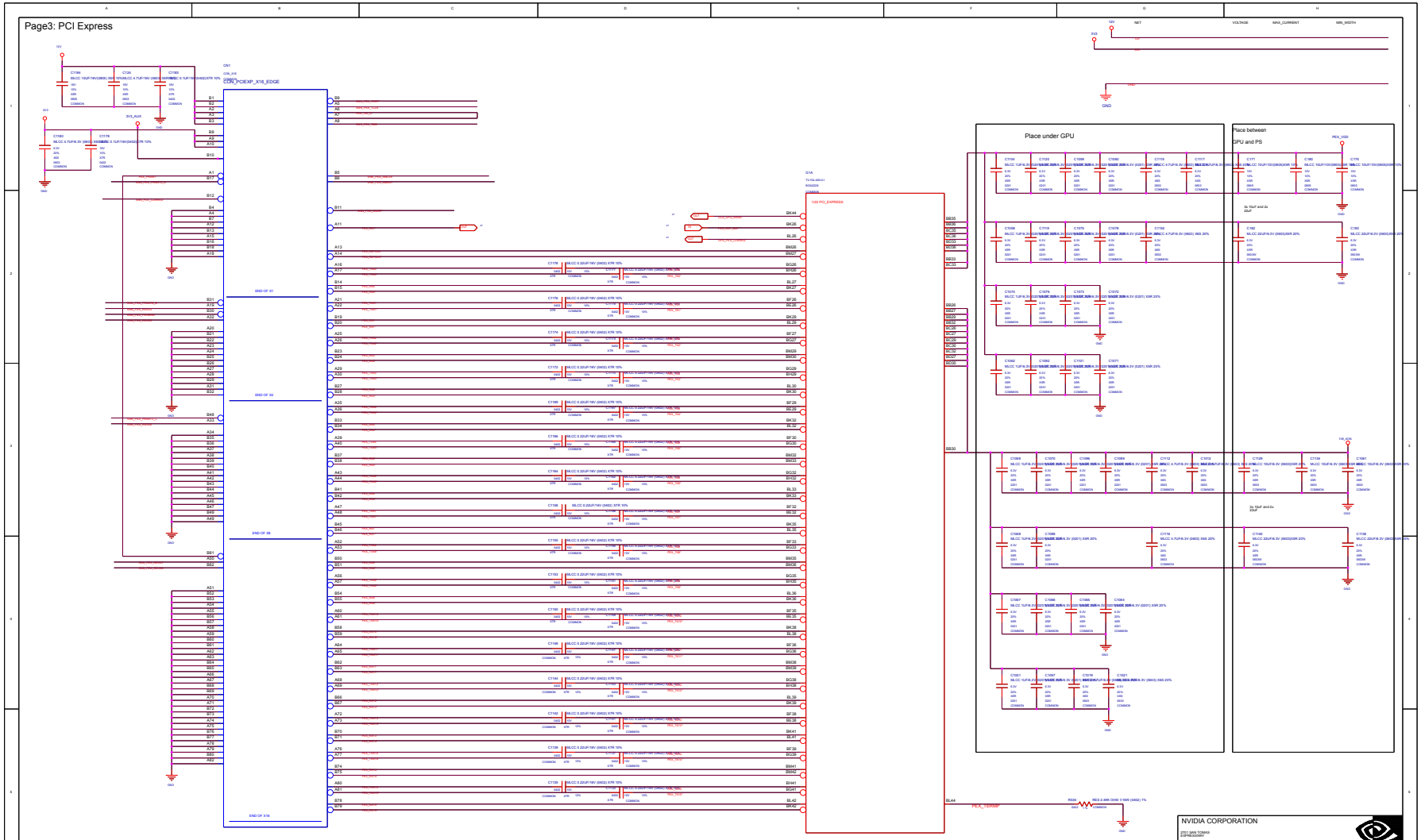

ALL NVIDIA DESIGN SPECIFICATIONS, REFERENCE SPECIFICATIONS, REFERENCE BOARDS, FILES, DRAWINGS, DIAGNOSTICS, LISTS AND OTHER DOCUMENTS OR INFORMATION (TOGETHER AND SEPARATELY, "MATERIALS") ARE BEING PROVIDED "AS IS". THE MATERIALS
COMPRISE
CONTAIN KNOWN AND UNKNOWN VIOLATIONS OR DEVIATIONS OF INDUSTRY STANDARDS AND SPECIFICATIONS. NVIDIA MAKES NO WARRANTIES, EXPRESSED, IMPLIED, STATUTORY OR OTHERWISE WITH RESPECT TO THE MATERIALS OR OTHERWISE, AND EXPRESSLY DISCLAIMS
ALL
IMPLIED WARRANTIES INCLUDING, WITHOUT LIMITATION, THE WARRANTIES OF DESIGN, OF NONINFRINGEMENT, MERCHANTABILITY OR FITNESS FOR A PARTICULAR PURPOSE, OR ARISING FROM A COURSE OF DEALING, TRADE USAGE, TRADE PRACTICE, OR INDUSTRY
STANDARDS.

Page5: MEMORY: GPU Partition A/B

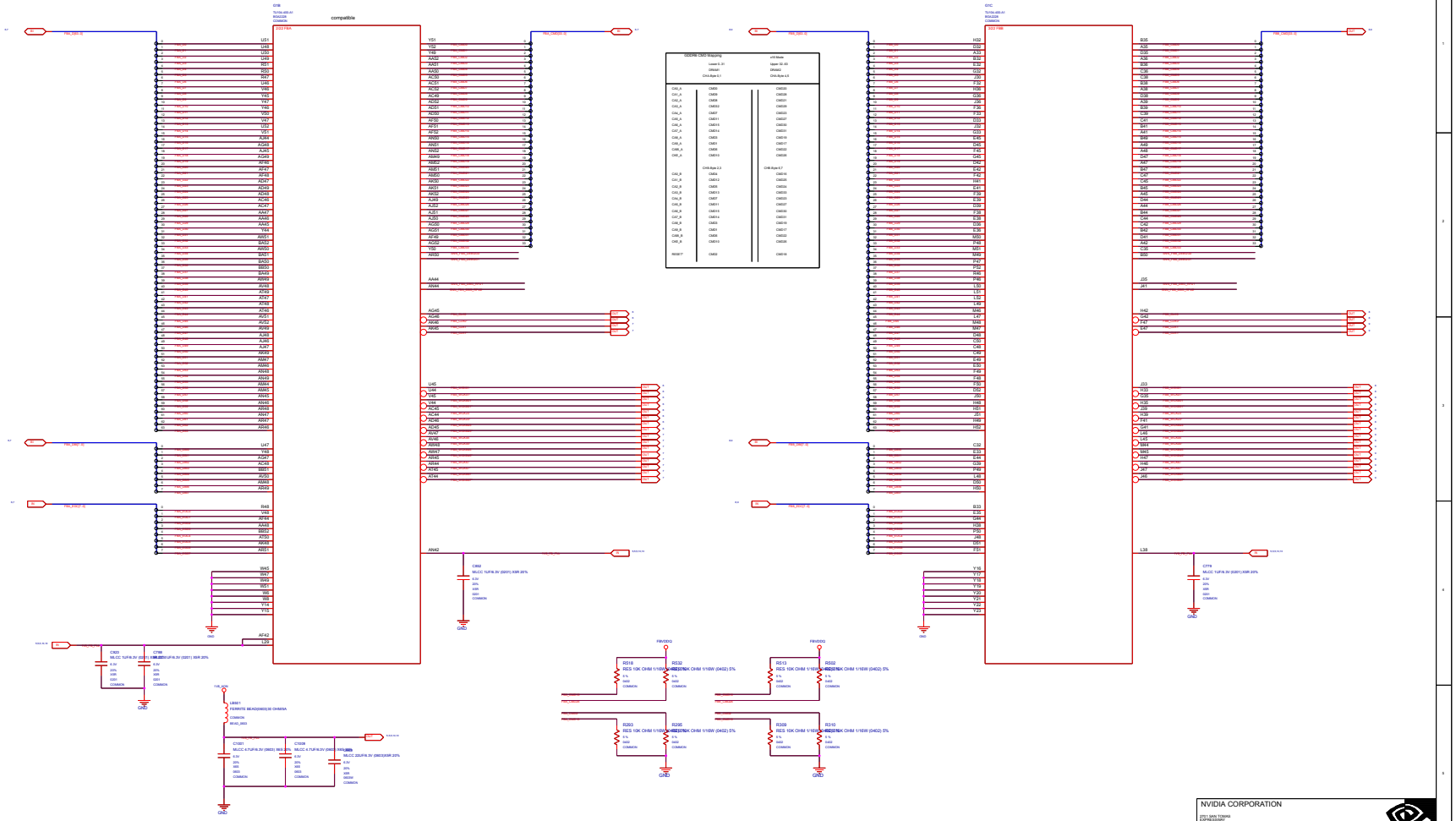

ASSEMBLY	<ASSEMBLY_DESCRIPTION>
PAGE DETAIL	MEMORY: GPU FB_AB

ALL NVIDIA DESIGN SPECIFICATIONS, REFERENCE SPECIFICATIONS, REFERENCE BOARDS, FILES, DRAWINGS, DIAGNOSTICS, LISTS AND OTHER DOCUMENTS OR INFORMATION (TOGETHER AND SEPARATELY, "MATERIALS") ARE BEING PROVIDED "AS IS". THE MATERIALS MAY HAVE MAN KNOWN AND UNKNOWN VIOLATIONS OR DEVIATIONS OF INDUSTRY STANDARDS AND SPECIFICATIONS. NVIDIA MAKES NO WARRANTIES, EXPRESSED, IMPLIED, STATUTORY OR OTHERWISE WITH RESPECT TO THE MATERIALS OR OTHERWISE, AND EXPRESSLY DISCLAIMS ALL IMPLIED WARRANTIES INCLUDING, WITHOUT LIMITATION, THE WARRANTIES OF DESIGN, OF NONINFRINGEMENT, MERCHANTABILITY OR FITNESS FOR A PARTICULAR PURPOSE, OR ARISING FROM A COURSE OF DEALING, TRADE USAGE, TRADE PRACTICE, OR INDUSTRY STANDARDS.

NVIDIA CORPORATION
2701 SAN TOMAS
EXPRESSWAY
SANTA CLARA, CA 95050, USA

NV_PN	600-1G161-BASE-000		
PCB REV	PG161-A00	PAGE	5 OF 53
BOM REV	A	DATE	21-OCT-2018

Page6: MEMORY: FBA Partition 31..0

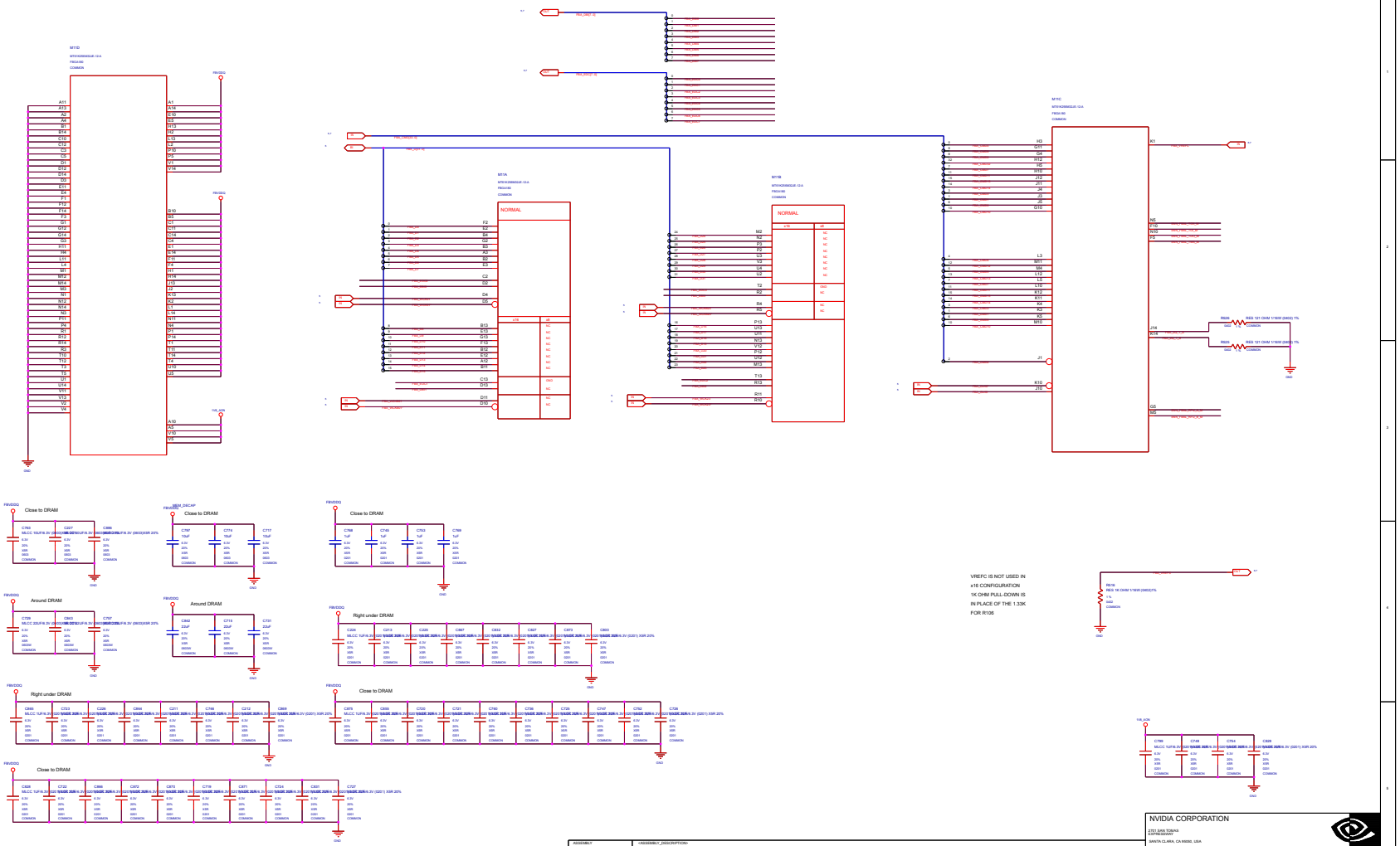

ASSEMBLY	<ASSEMBLY_DESCRIPTION>
PAGE DETAIL	MEMORY: FBA[31:0]

ALL NVIDIA DESIGN SPECIFICATIONS, REFERENCE SPECIFICATIONS, REFERENCE BOARDS, FILES, DRAWINGS, DIAGNOSTICS, LISTS AND OTHER DOCUMENTS OR INFORMATION (TOGETHER AND SEPARATELY, MATERIALS") ARE BEING PROVIDED "AS IS". THE MATERIALS
MAY
CONTAIN KNOWN AND UNKNOWN VIOLATIONS OR DEVIATIONS OF INDUSTRY STANDARDS AND SPECIFICATIONS. NVIDIA MAKES NO WARRANTIES, EXPRESSED, IMPLIED, STATUTORY OR OTHERWISE WITH RESPECT TO THE MATERIALS OR OTHERWISE, AND EXPRESSLY DISCLAIMS
ALL
IMPLIED WARRANTIES INCLUDING, WITHOUT LIMITATION, THE WARRANTIES OF DESIGN, OF NONINFRINGEMENT, MERCHANTABILITY OR FITNESS FOR A PARTICULAR PURPOSE, OR ARISING FROM A COURSE OF DEALING, TRADE USAGE, TRADE PRACTICE, OR INDUSTRY
STANDARDS.

NVIDIA CORPORATION
2701 SAN TOMAS
EXPRESSWAY
SANTA CLARA, CA 95050, USA

NV_PN	600-1G161-BASE-000		
PCB REV	PV161-A02	PAGE	6 OF 53
BOM REV	A	DATE	FRIDAY, 1 2010

Page7: MEMORY: FBA Partition 63..32

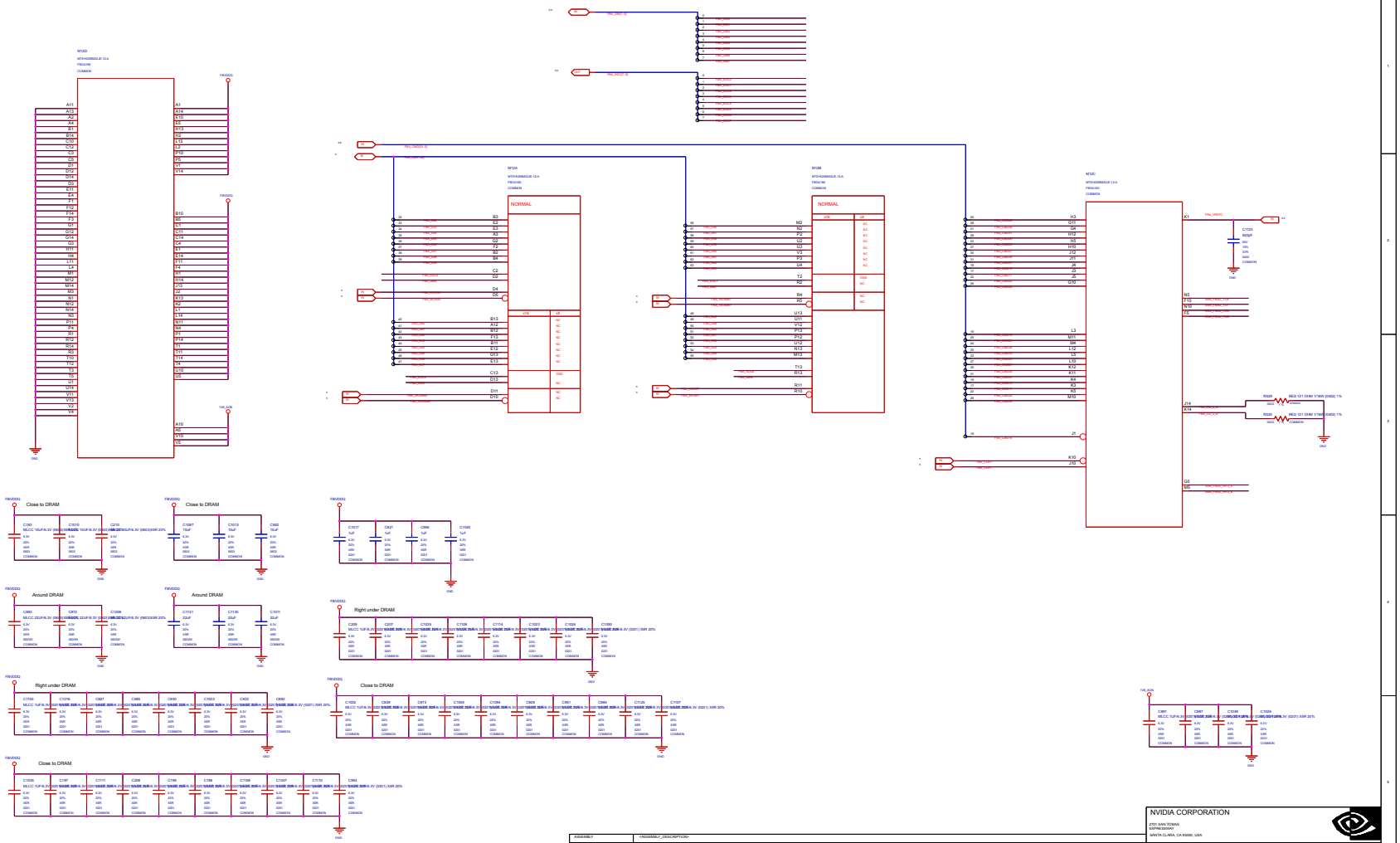

NVIDIA CORPORATION
2701 SAN TOMAS
EXPRESSWAY
SANTA CLARA, CA 95051, USA

ASSEMBLY	<ASSEMBLY_DESCRIPTION>
PAGE DETAIL	MEMORY: FBA[63:32]

NV_PN	600-1G161-BASE-000		
PCB REV	PG-161-A00	PAGE	7 OF 53
BOM REV	A	DATE	21-OCT-2018

ALL NVIDIA DESIGN SPECIFICATIONS, REFERENCE SPECIFICATIONS, REFERENCE BOARDS, FILES, DRAWINGS, DIAGNOSTICS, LISTS AND OTHER DOCUMENTS (IN INFORMATION) (TOGETHER AND SEPARATELY, "MATERIALS") ARE BEING PROVIDED "AS IS". THE MATERIALS MAY HAVE THEIR KNOWN AND UNKNOWN VIOLATIONS OR DEVIATIONS OF INDUSTRY STANDARDS AND SPECIFICATIONS. NVIDIA MAKES NO WARRANTIES, EXPRESSED, IMPLIED, STATUTORY OR OTHERWISE WITH RESPECT TO THE MATERIALS OR OTHERWISE, AND EXPRESSLY DISCLAIMS ALL IMPLIED WARRANTIES INCLUDING, WITHOUT LIMITATION, THE WARRANTIES OF DESIGN, OF NONINFRINGEMENT, MERCHANTABILITY OR FITNESS FOR A PARTICULAR PURPOSE, OR ARISING FROM A COURSE OF DEALING, TRADE USAGE, TRADE PRACTICE, OR INDUSTRY STANDARDS.

Page8: MEMORY: FBB Partition 31..0

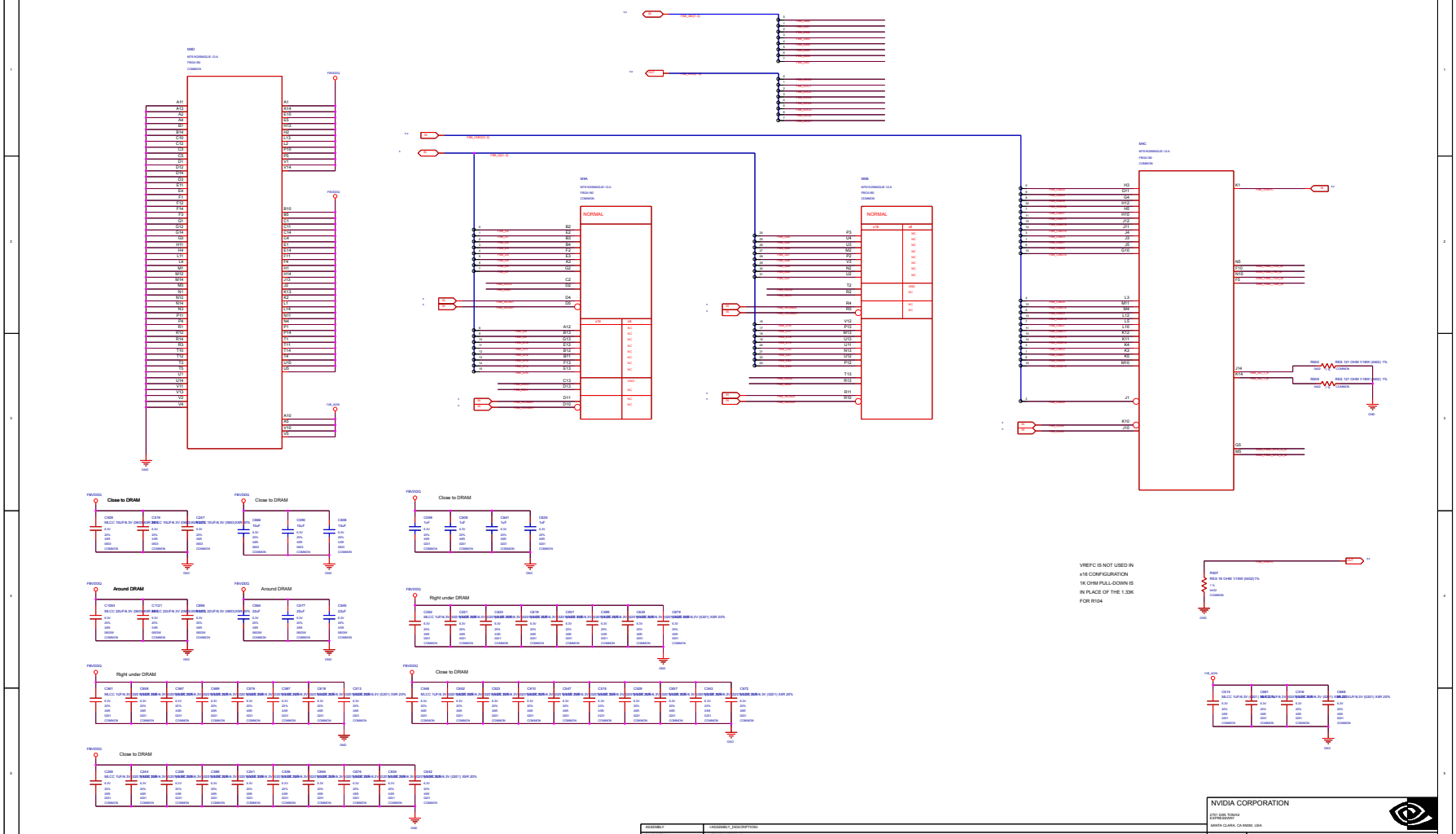

ASSEMBLY	<ASSEMBLY_DESCRIPTION>
PROJ DETAIL	MEMORY: FBB[31:0]

ALL NVIDIA DESIGN SPECIFICATIONS, REFERENCE SPECIFICATIONS, REFERENCE BOARDS, FILES, DRAWINGS, DIAGNOSTICS, LISTS AND OTHER DOCUMENTS OR INFORMATION (TOGETHER AND SEPARATELY, "MATERIALS") ARE BEING PROVIDED "AS IS". THE MATERIALS MAY
CONTAIN KNOWN AND UNKNOWN VIOLATIONS OR DEVIATIONS OF INDUSTRY STANDARDS AND SPECIFICATIONS. NVIDIA MAKES NO WARRANTIES, EXPRESSED, IMPLIED, STATUTORY OR OTHERWISE WITH RESPECT TO THE MATERIALS OR OTHERWISE, AND EXPRESSLY DISCLAIMS
ALL
IMPLIED WARRANTIES INCLUDING, WITHOUT LIMITATION, THE WARRANTIES OF DESIGN, OF NONINFRINGEMENT, MERCHANTABILITY OR FITNESS FOR A PARTICULAR PURPOSE, OR ARISING FROM A COURSE OF DEALING, TRADE USAGE, TRADE PRACTICE, OR INDUSTRY
STANDARDS.

NVIDIA CORPORATION
2701 SAN TOMAS
EXPRESSWAY
SANTA CLARA, CA 95050, USA

NV_PN	600-1G161-BASE-000		
PCB REV	PC161-A00	PAGE	8 OF 52
SCM REV	A	DATE	21-OCT-2015

Page9: MEMORY: FBB Partition 63..32

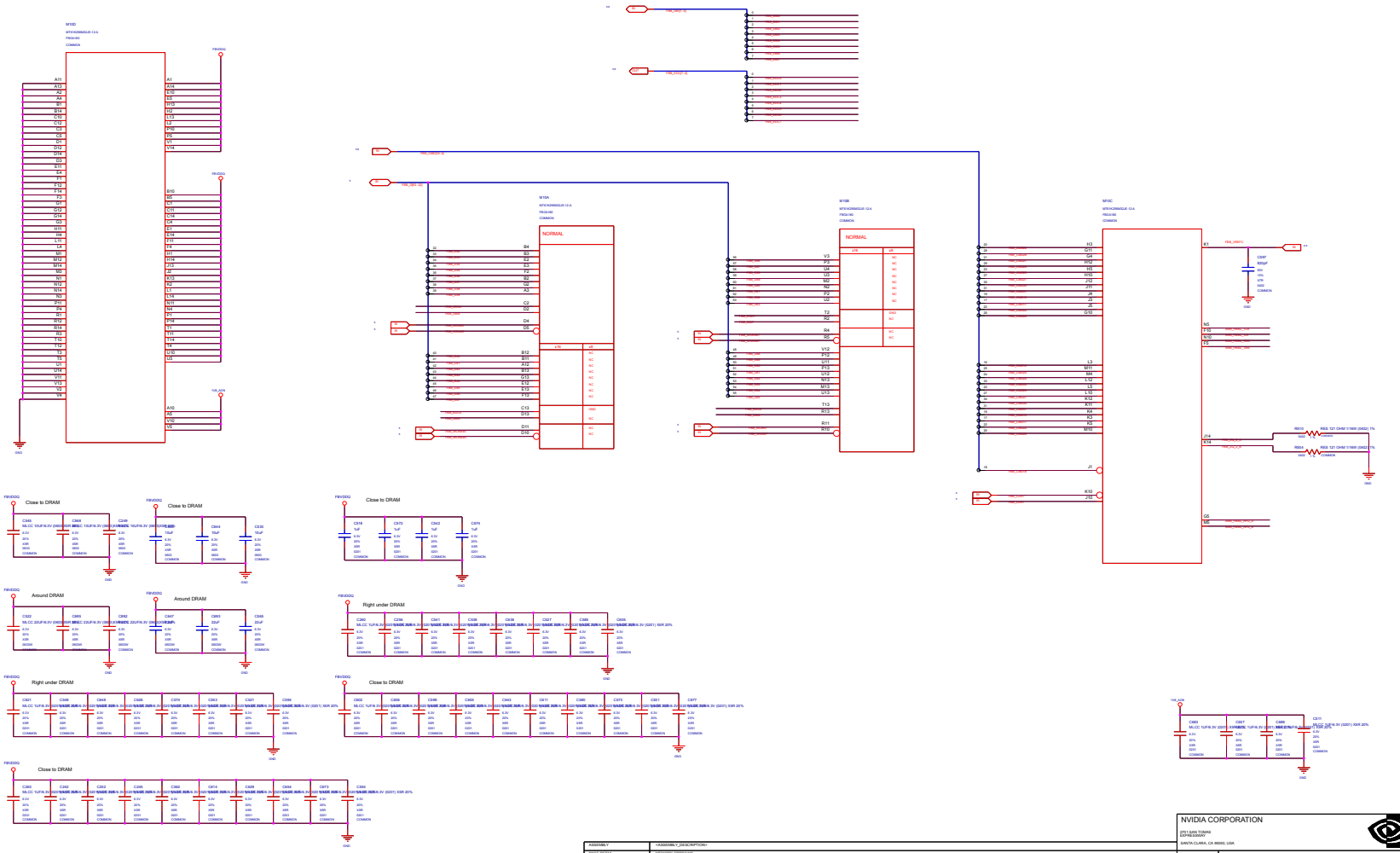

ASSEMBLY	<ASSEMBLY_DESCRIPTION>
PAGE DETAIL	MEMORY: FBB[63:32]

ALL NVIDIA DESIGN SPECIFICATIONS, REFERENCE SPECIFICATIONS, REFERENCE BOARDS, FILES, DRAWINGS, DIAGNOSTICS, LISTS AND OTHER DOCUMENTS OR INFORMATION (TOGETHER AND SEPARATELY, MATERIALS") ARE BEING PROVIDED "AS IS". THE MATERIALS
ALL
CONTAIN KNOWN AND UNKNOWN VIOLATIONS OR DEVIATIONS OF INDUSTRY STANDARDS AND SPECIFICATIONS. NVIDIA MAKES NO WARRANTIES, EXPRESSED, IMPLIED, STATUTORY OR OTHERWISE WITH RESPECT TO THE MATERIALS OR OTHERWISE, AND EXPRESSLY DISCLAIMS
ALL
IMPLIED WARRANTIES INCLUDING, WITHOUT LIMITATION, THE WARRANTIES OF DESIGN, OF NONINFRINGEMENT, MERCHANTABILITY OR FITNESS FOR A PARTICULAR PURPOSE, OR ARISING FROM A COURSE OF DEALING, TRADE USAGE, TRADE PRACTICE, OR INDUSTRY
STANDARDS.

NVIDIA CORPORATION

2701 SAN TOMAS
EXPRESSWAY

SANTA CLARA, CA 95050, USA

NV_PN	600-1G161-BASE-000		
PCB REV	PCI-TEI-A00	PAGE	9 OF 63
BOM REV	A	DATE	21-OCT-2016

Page10: MEMORY: GPU Partition C/D

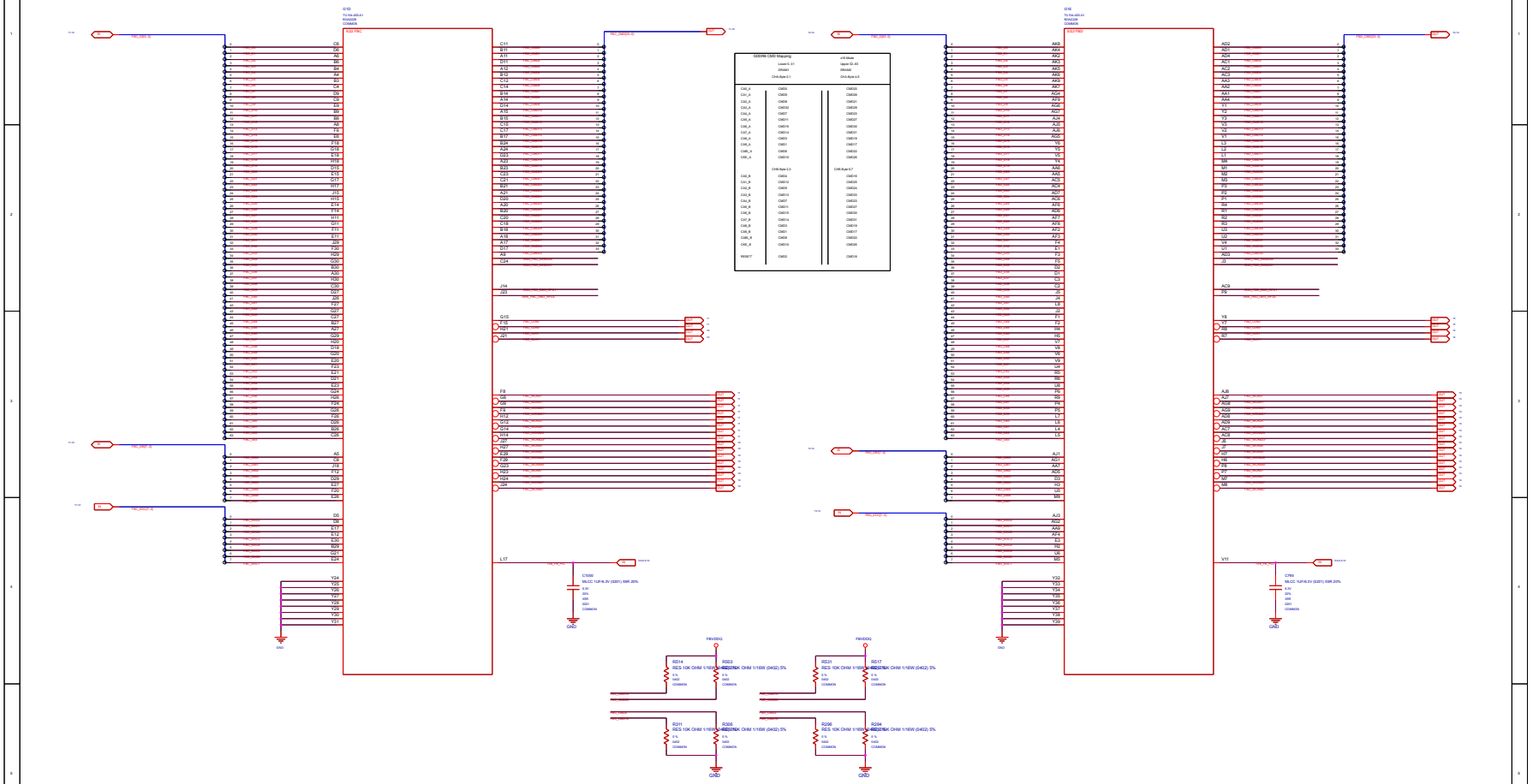

ASSEMBLY	<ASSEMBLY_DESCRIPTION>
PAGE DETAIL	MEMORY: GPU PA_C/D

ALL NVIDIA DESIGN SPECIFICATIONS, REFERENCE SPECIFICATIONS, REFERENCE BOARDS, FILES, DRAWINGS, DIAGNOSTICS, LISTS AND OTHER DOCUMENTS OR INFORMATION (TOGETHER AND SEPARATELY, "MATERIALS") ARE BEING PROVIDED "AS IS". THE MATERIALS MAY CONTAIN KNOWN AND UNKNOWN VIOLATIONS OR DEVIATIONS OF INDUSTRY STANDARDS AND SPECIFICATIONS. NVIDIA MAKES NO WARRANTIES, EXPRESSED, IMPLIED, STATUTORY OR OTHERWISE WITH RESPECT TO THE MATERIALS OR OTHERWISE, AND EXPRESSLY DISCLAIMS ALL IMPLIED WARRANTIES INCLUDING, WITHOUT LIMITATION, THE WARRANTIES OF DESIGN, OF NONINFRINGEMENT, MERCHANTABILITY OR FITNESS FOR A PARTICULAR PURPOSE, OR ARISING FROM A COURSE OF DEALING, TRADE USAGE, TRADE PRACTICE, OR INDUSTRY STANDARDS.

NVIDIA CORPORATION
2701 SAN TOMAS
EXPRESSWAY
SANTA CLARA, CA 95050, USA

NV_PN	600-1G161-BASE-000		
PCB REV	PCB01-REV	PAGE	10 OF 53
SCM REV	A	DATE	27-OCT-2015

Page11: MEMORY: FBC Partition 31..0

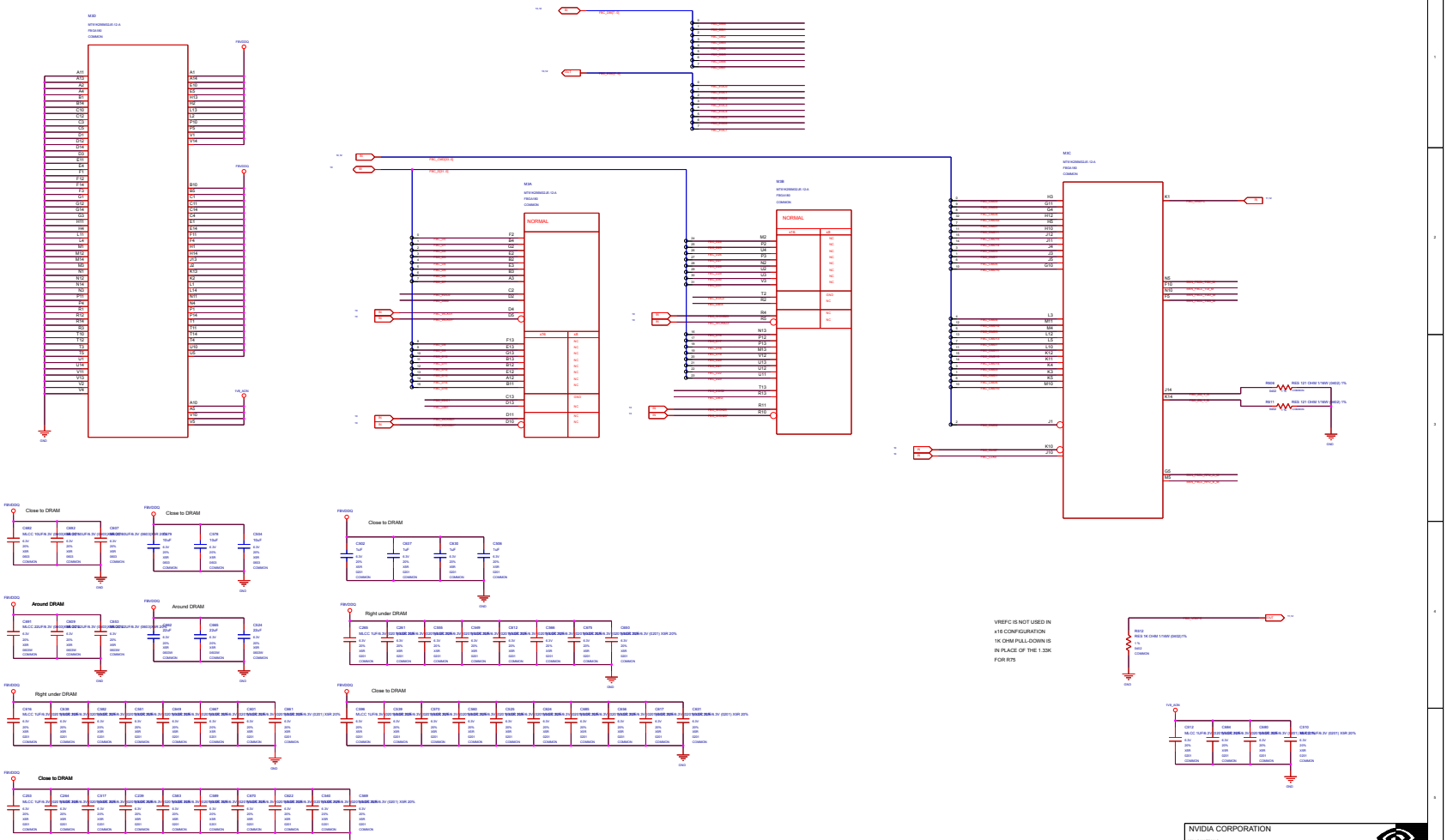

NVIDIA CORPORATION
2701 SAN TOMAS
EXPRESSWAY
SANTA CLARA, CA 95050, USA

NAV_PN	600-1G161-BASE-000		
PCB REV	PG161-A00	PAGE	11 OF 53
SCM REV	A	DATE	21-OCT-2015

ASSEMBLY	<ASSEMBLY_DESCRIPTION>
PAGE DETAIL	MEMORY: FBC[31:0]

ALL NVIDIA DESIGN SPECIFICATIONS, REFERENCE SPECIFICATIONS, REFERENCE BOARDS, FILES, DRAWINGS, DIAGNOSTICS, LISTS AND OTHER DOCUMENTS OR INFORMATION (TOGETHER AND SEPARATELY, MATERIALS) ARE BEING PROVIDED "AS IS". THE MATERIALS
MAY
CONTAIN KNOWN AND UNKNOWN VIOLATIONS OR DEVIATIONS OF INDUSTRY STANDARDS AND SPECIFICATIONS. NVIDIA MAKES NO WARRANTIES, EXPRESSED, IMPLIED, STATUTORY OR OTHERWISE WITH RESPECT TO THE MATERIALS OR OTHERWISE, AND EXPRESSLY DISCLAIMS
ALL
IMPLIED WARRANTIES INCLUDING, WITHOUT LIMITATION, THE WARRANTIES OF DESIGN, OF NONINFRINGEMENT, MERCHANTABILITY OR FITNESS FOR A PARTICULAR PURPOSE, OR ARISING FROM A COURSE OF DEALING, TRADE USAGE, TRADE PRACTICE, OR INDUSTRY
STANDARDS.

Page12: MEMORY: FBC Partition 63..32

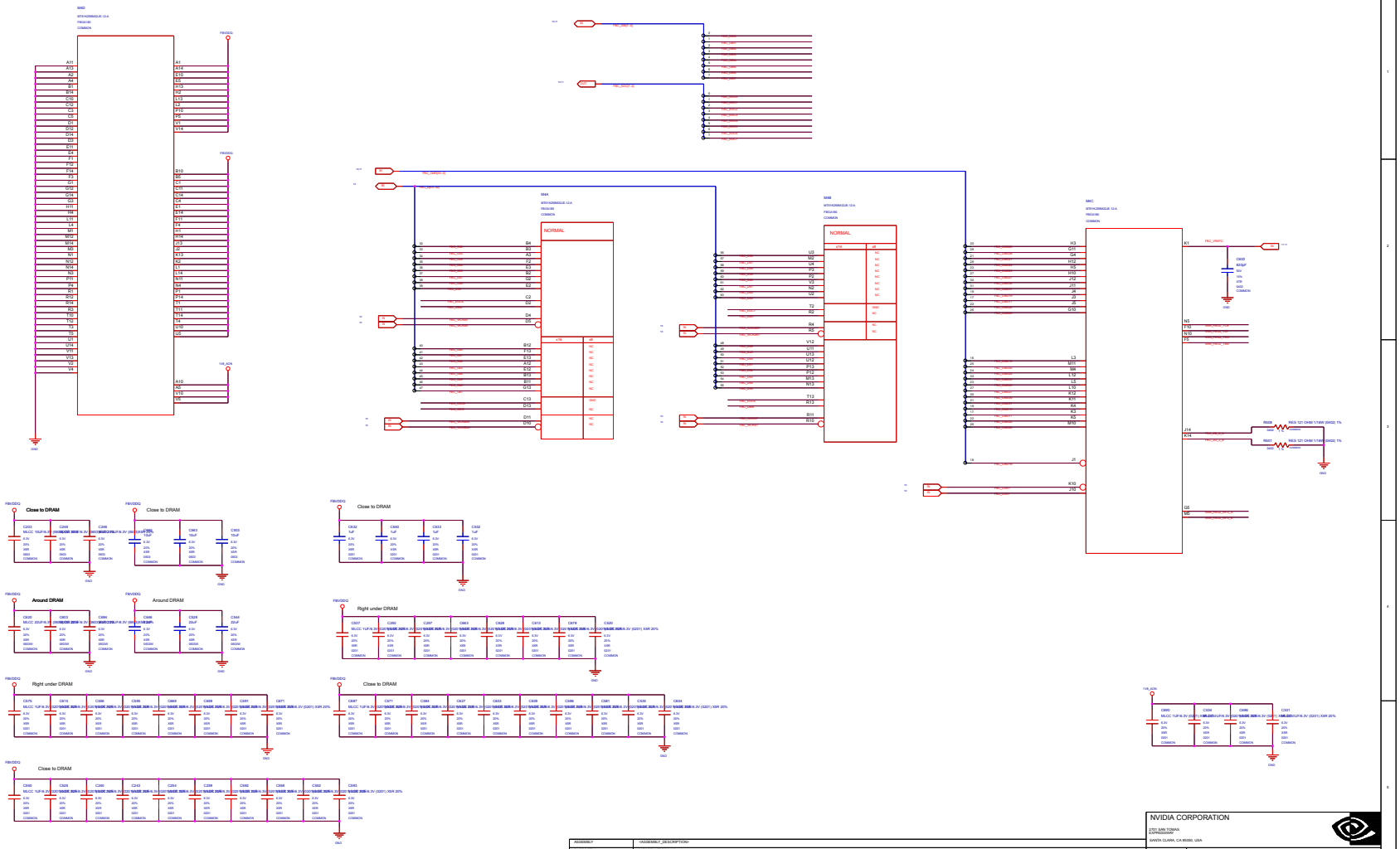

ASSEMBLY	<ASSEMBLY_DESCRIPTION>
PAGE DETAIL	MEMORY: FBC[63:32]

ALL NVIDIA DESIGN SPECIFICATIONS, REFERENCE SPECIFICATIONS, REFERENCE BOARDS, FILES, DRAWINGS, DIAGNOSTICS, LISTS AND OTHER DOCUMENTS (OR INFORMATION) (TOGETHER AND SEPARATELY, "MATERIALS") ARE BEING PROVIDED "AS IS". THE MATERIALS MAY CONTAIN KNOWN AND UNKNOWN VIOLATIONS OR DEVIATIONS OF INDUSTRY STANDARDS AND SPECIFICATIONS. NVIDIA MAKES NO WARRANTIES, EXPRESSED, IMPLIED, STATUTORY OR OTHERWISE WITH RESPECT TO THE MATERIALS OR OTHERWISE, AND EXPRESSLY DISCLAIMS ANY IMPLIED WARRANTIES INCLUDING, WITHOUT LIMITATION, THE WARRANTIES OF DESIGN, OF NONINFRINGEMENT, MERCHANTABILITY OR FITNESS FOR A PARTICULAR PURPOSE, OR ARISING FROM A COURSE OF DEALING, TRADE USAGE, TRADE PRACTICE, OR INDUSTRY STANDARDS.

NVIDIA CORPORATION
2701 SAN TOMAS
EXPRESSWAY
SANTA CLARA, CA 95050, USA

NV_PN	600-1G161-BASE-000		
PCB REV	PG161-A00	PAGE	12 OF 53
BOM REV	A	DATE	07-OCT-2016

Page13: MEMORY: FBD Partition 31..0

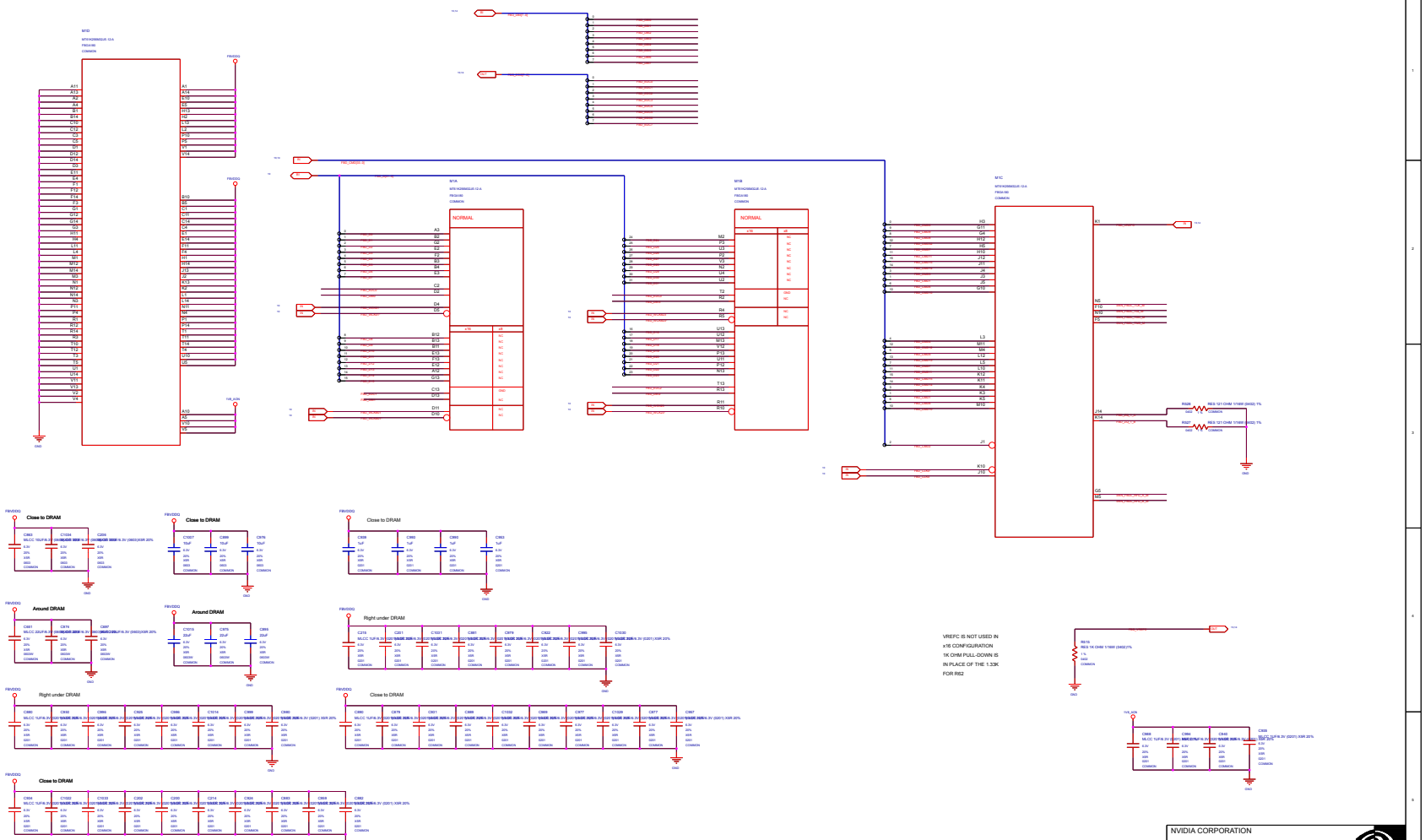

ASSEMBLY	<ASSEMBLY_DESCRIPTION>
PAGE DETAIL	MEMORY: FBD[31:0]

ALL NVIDIA DESIGN SPECIFICATIONS, REFERENCE SPECIFICATIONS, REFERENCE BOARDS, FILES, DRAWINGS, DIAGNOSTICS, LISTS AND OTHER DOCUMENTS OR INFORMATION (TOGETHER AND SEPARATELY, MATERIALS) ARE BEING PROVIDED "AS IS". THE MATERIALS
MAY
CONTAIN KNOWN AND UNKNOWN VIOLATIONS OR DEVIATIONS OF INDUSTRY STANDARDS AND SPECIFICATIONS. NVIDIA MAKES NO WARRANTIES, EXPRESSED, IMPLIED, STATUTORY OR OTHERWISE WITH RESPECT TO THE MATERIALS OR OTHERWISE, AND EXPRESSLY DISCLAIMS
ALL
IMPLIED WARRANTIES INCLUDING, WITHOUT LIMITATION, THE WARRANTIES OF DESIGN, OF NONINFRINGEMENT, MERCHANTABILITY OR FITNESS FOR A PARTICULAR PURPOSE, OR ARISING FROM A COURSE OF DEALING, TRADE USAGE, TRADE PRACTICE, OR INDUSTRY
STANDARDS.

NVIDIA CORPORATION
2701 SAN TOMAS
EXPRESSWAY
SANTA CLARA, CA 95050, USA

NV_PN	600-1G161-BASE-000		
PCB REV	PCI-E1 AND	PAGE	13 OF 53
BOM REV	A	DATE	21-OCT-2010

Page14: MEMORY: FBD Partition 63..32

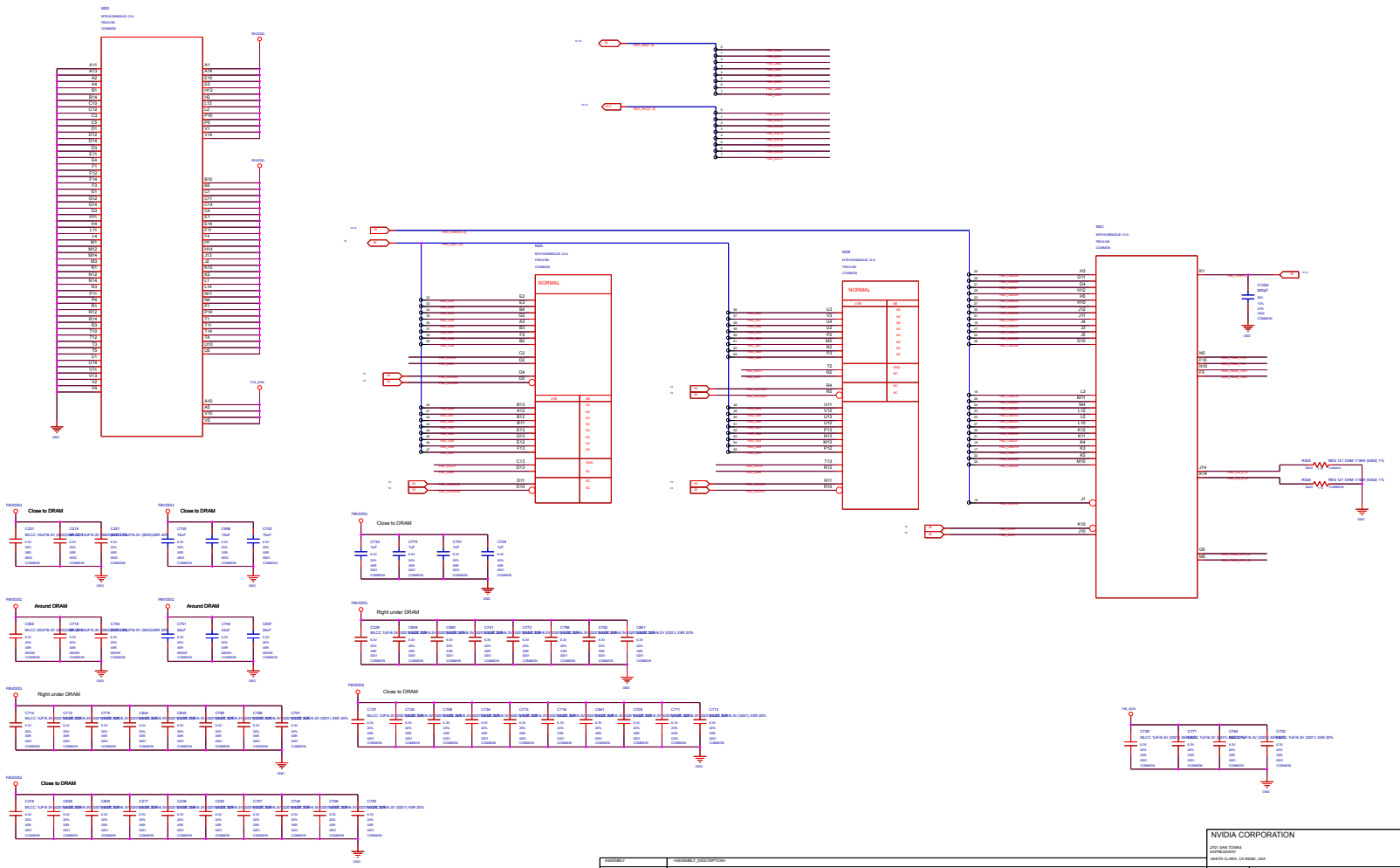

ASSEMBLY	<ASSEMBLY_DESCRIPTION>
PAGE DETAIL	MEMORY: FBD[63:32]

ALL NVIDIA DESIGN SPECIFICATIONS, REFERENCE SPECIFICATIONS, REFERENCE BOARDS, FILES, DRAWINGS, DIAGNOSTICS, LISTS AND OTHER DOCUMENTS OR INFORMATION (TOGETHER AND SEPARATELY, "MATERIALS") ARE BEING PROVIDED "AS IS". THE MATERIALS MAY
CONTAIN KNOWN AND UNKNOWN VIOLATIONS OR DEVIATIONS OF INDUSTRY STANDARDS AND SPECIFICATIONS. NVIDIA MAKES NO WARRANTIES, EXPRESSED, IMPLIED, STATUTORY OR OTHERWISE WITH RESPECT TO THE MATERIALS OR OTHERWISE, AND EXPRESSLY DISCLAIMS
ALL
IMPLIED WARRANTIES INCLUDING, WITHOUT LIMITATION, THE WARRANTIES OF DESIGN, OF NONINFRINGEMENT, MERCHANTABILITY OR FITNESS FOR A PARTICULAR PURPOSE, OR ARISING FROM A COURSE OF DEALING, TRADE USAGE, TRADE PRACTICE, OR INDUSTRY
STANDARDS.

NVIDIA CORPORATION
2701 SAN TOMAS
EXPRESSWAY
SANTA CLARA, CA 95050, USA

INV_PN	600-1G161-BASE-000		
PCB REV	PG161-A00	PAGE	14 OF 53
BOM REV	A	DATE	31-OCT-2018

Page15: GPU PWR and GND

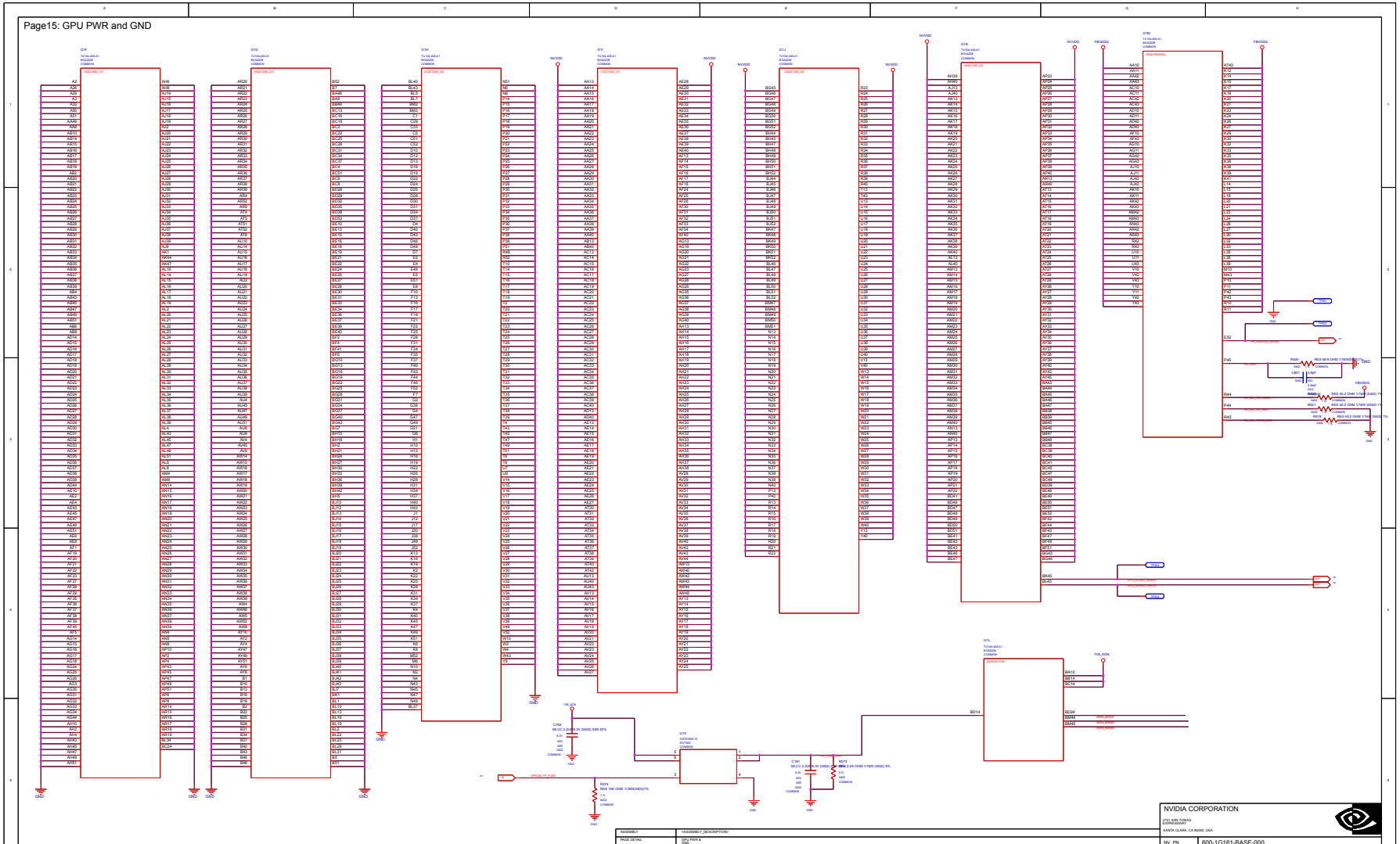

ALL NVIDIA DESIGN SPECIFICATIONS, REFERENCE SPECIFICATIONS, REFERENCE BOARDS, FILES, DRAWINGS, DIAGNOSTICS, LISTS AND OTHER DOCUMENTS OR INFORMATION (TOGETHER AND SEPARATELY, "MATERIALS") ARE BEING PROVIDED "AS IS". THE MATERIALS
ALL
CONTAIN KNOWN AND UNKNOWN VIOLATIONS OR DEVIATIONS OF INDUSTRY STANDARDS AND SPECIFICATIONS. NVIDIA MAKES NO WARRANTIES, EXPRESSED, IMPLIED, STATUTORY OR OTHERWISE WITH RESPECT TO THE MATERIALS OR OTHERWISE, AND EXPRESSLY DISCLAIMS
ALL
IMPLIED WARRANTIES INCLUDING, WITHOUT LIMITATION, THE WARRANTIES OF DESIGN, OF NONINFRINGEMENT, MERCHANTABILITY OR FITNESS FOR A PARTICULAR PURPOSE, OR ARISING FROM A COURSE OF DEALING, TRADE USAGE, TRADE PRACTICE, OR INDUSTRY
ALL
STANDARDS.

ASSEMBLY	<ASSEMBLY_DESCRIPTION>
PAGE DETAIL	GPU PWR & GND

NVIDIA CORPORATION
2701 SAN TOMAS
SUPRIS:SS0002
SANTA CLARA, CA 95050, USA

NV_PN	600-1G161-BASE-000		
PCB REV	PG161-A00	PAGE	15 OF 53
BOM REV	A	DATE	21-OCT-2016

Page16: GPU Decoupling 1

FBVDDQ

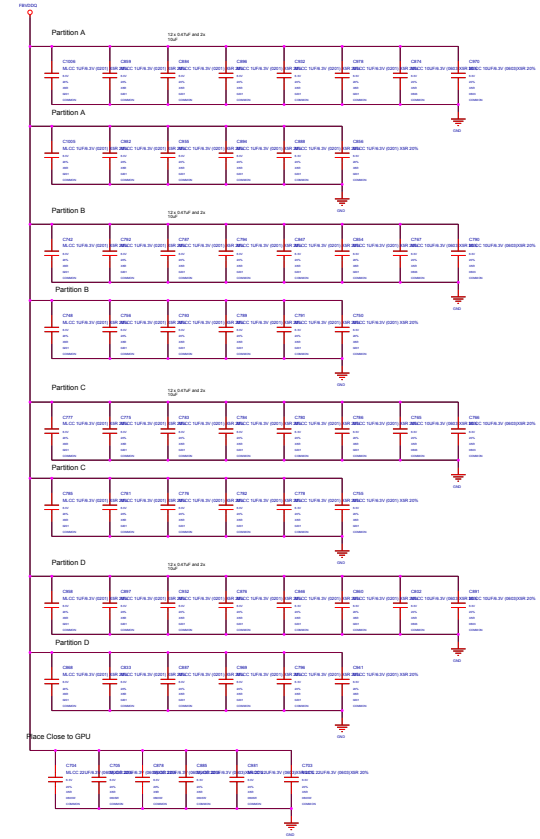

NVVDD

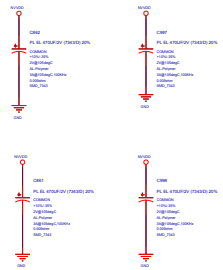

1V8_AON

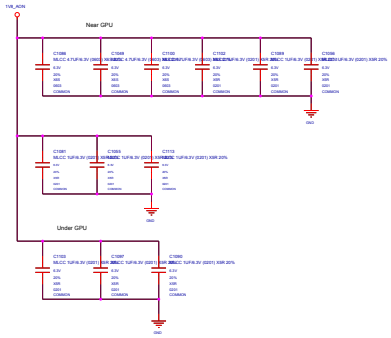

ASSEMBLY	<ASSEMBLY_DESCRIPTION>
PAGE DETAIL	GPU Decoupling

ALL NVIDIA DESIGN SPECIFICATIONS, REFERENCE SPECIFICATIONS, REFERENCE BOARDS, FILES, DRAWINGS, DIAGNOSTICS, LISTS AND OTHER DOCUMENTS OR INFORMATION (TOGETHER AND SEPARATELY, "MATERIALS") ARE BEING PROVIDED "AS IS". THE MATERIALS MAY
CONTAIN KNOWN AND UNKNOWN VIOLATIONS OR DEVIATIONS OF INDUSTRY STANDARDS AND SPECIFICATIONS. NVIDIA MAKES NO WARRANTIES, EXPRESSED, IMPLIED, STATUTORY OR OTHERWISE WITH RESPECT TO THE MATERIALS OR OTHERWISE, AND EXPRESSLY DISCLAIMS
IMPLIED WARRANTIES INCLUDING, WITHOUT LIMITATION, THE WARRANTIES OF DESIGN, OF NONINFRINGEMENT, MERCHANTABILITY OR FITNESS FOR A PARTICULAR PURPOSE, OR ARISING FROM A COURSE OF DEALING, TRADE USAGE, TRADE PRACTICE, OR INDUSTRY
STANDARDS.

NVIDIA CORPORATION
2701 SAN TOMAS
EXPRESSWAY
SANTA CLARA, CA 95050, USA

NV_PN	600-1G161-BASE-000		
PCB REV	PG161-R00	PAGE	16 OF 53
ROM REV	A	DATE	21-OCT-2019

Page17: GPU Decoupling 2

NVVDD

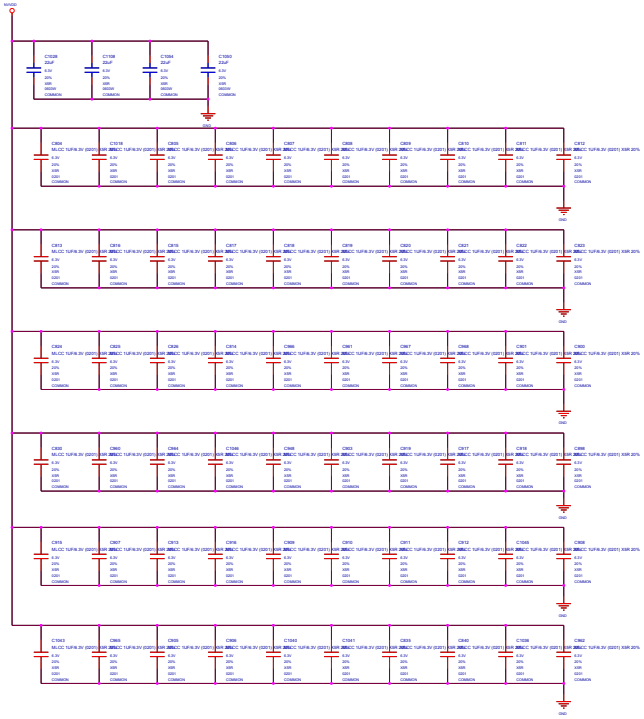

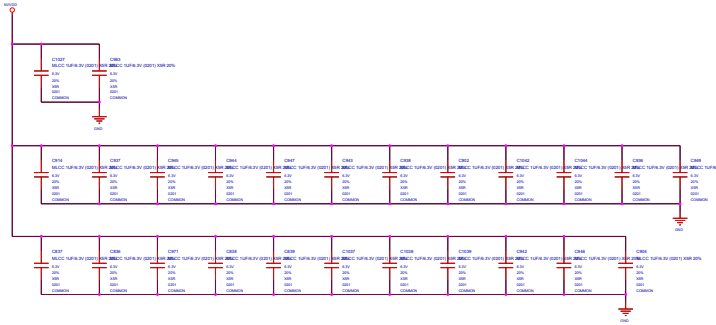

ASSEMBLY	<ASSEMBLY_DESCRIPTION>
PAGE DETAIL	GPU Decoupling2

ALL NVIDIA DESIGN SPECIFICATIONS, REFERENCE SPECIFICATIONS, REFERENCE BOARDS, FILES, DRAWINGS, DIAGNOSTICS, LISTS AND OTHER DOCUMENTS OR INFORMATION (TOGETHER AND SEPARATELY, "MATERIALS") ARE BEING PROVIDED "AS IS". THE MATERIALS
ALL
CONTAIN KNOWN AND UNKNOWN VIOLATIONS OR DEVIATIONS OF INDUSTRY STANDARDS AND SPECIFICATIONS. NVIDIA MAKES NO WARRANTIES, EXPRESSED, IMPLIED, STATUTORY OR OTHERWISE WITH RESPECT TO THE MATERIALS OR OTHERWISE, AND EXPRESSLY DISCLAIMS
ALL
IMPLIED WARRANTIES INCLUDING, WITHOUT LIMITATION, THE WARRANTIES OF DESIGN, OF NONINFRINGEMENT, MERCHANTABILITY OR FITNESS FOR A PARTICULAR PURPOSE, OR ARISING FROM A COURSE OF DEALING, TRADE USAGE, TRADE PRACTICE, OR INDUSTRY
STANDARDS.

NVIDIA CORPORATION
2701 SAN TOMAS
EXPRESSWAY
SANTA CLARA, CA 95050, USA

NV_PN	600-1G161-BASE-000		
PCB REV	PD-1587-AND	PAGE	17 OF 53
BOM REV	A	DATE	21-OCT-2018

IFPAB DVI-D-DL CO-LAYOUT WITH 2x DP

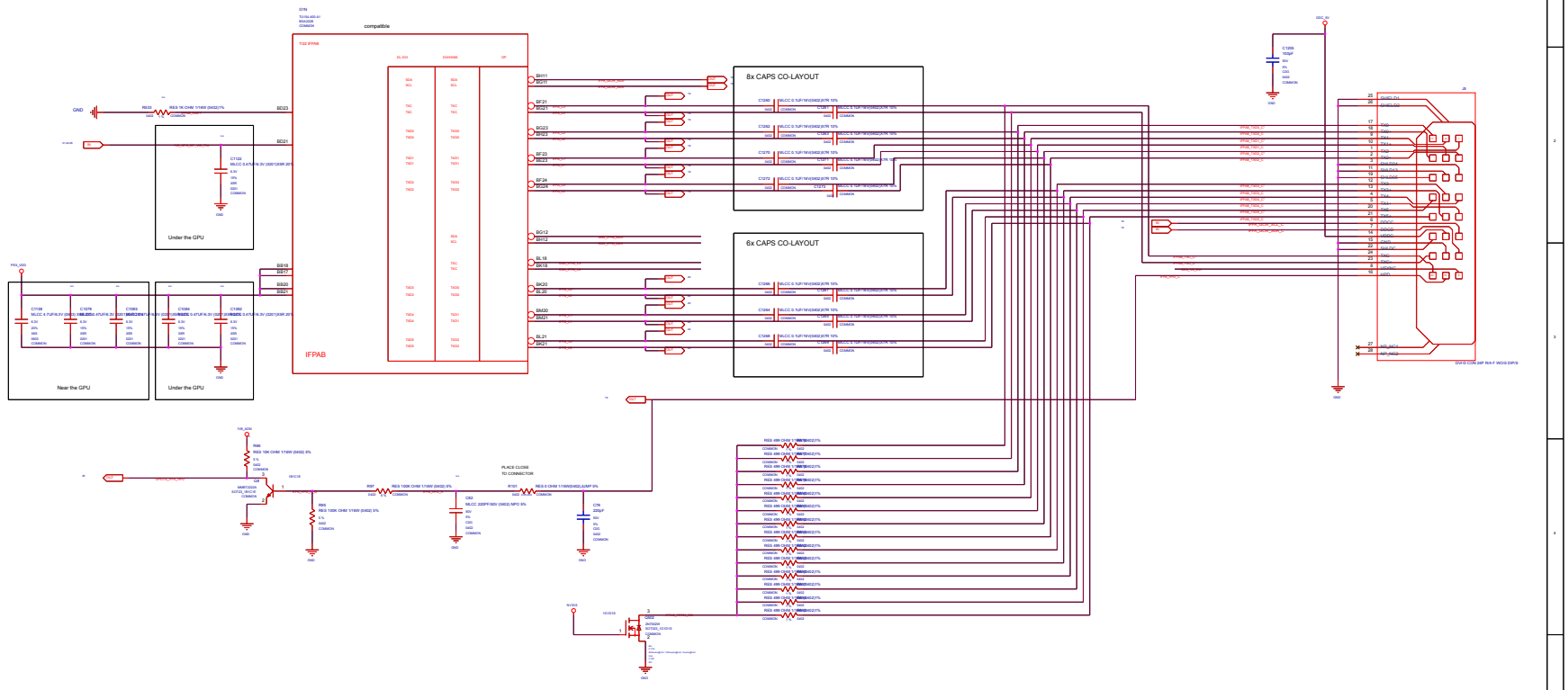

ASSEMBLY	<ASSEMBLY_DESCRIPTION>
PAGE DETAIL	02: IFPAB DVI-D-DL

ALL NVIDIA DESIGN SPECIFICATIONS, REFERENCE SPECIFICATIONS, REFERENCE BOARDS, FILES, DRAWINGS, DIAGNOSTICS, LISTS AND OTHER DOCUMENTS OR INFORMATION (TOGETHER AND SEPARATELY, "MATERIALS") ARE BEING PROVIDED "AS IS". THE MATERIALS MAY CONTAIN KNOWN AND UNKNOWN VIOLATIONS OR DEVIATIONS OF INDUSTRY STANDARDS AND SPECIFICATIONS. NVIDIA MAKES NO WARRANTIES, EXPRESSED, IMPLIED, STATUTORY OR OTHERWISE WITH RESPECT TO THE MATERIALS OR OTHERWISE, AND EXPRESSLY DISCLAIMS IMPLIED WARRANTIES INCLUDING, WITHOUT LIMITATION, THE WARRANTIES OF DESIGN, OF NONINFRINGEMENT, MERCHANTABILITY OR FITNESS FOR A PARTICULAR PURPOSE, OR ARISING FROM A COURSE OF DEALING, TRADE USAGE, TRADE PRACTICE, OR INDUSTRY STANDARDS.

NVIDIA CORPORATION
2701 SAN TOMAS
EXPRESSWAY
SANTA CLARA, CA 95050, USA

NV_PN	600-1G161-BASE-000		
PCB REV	PG161-A00	PAGE	18 OF 52
BOM REV	A	DATE	21-OCT-2010

Page19: IFPA DP

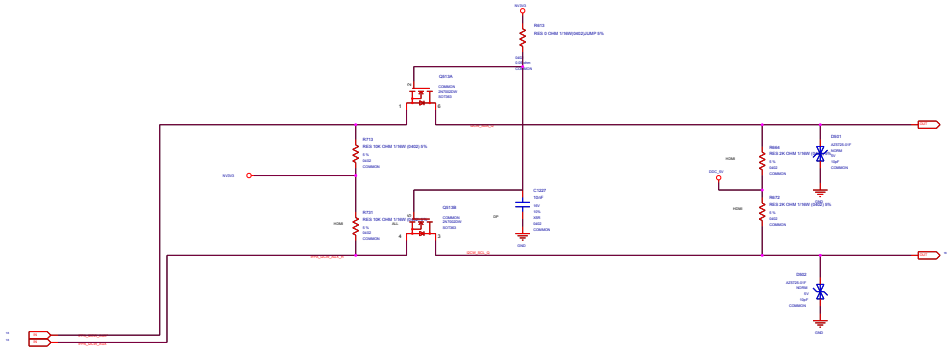

IFPA DP CO-LAYOUT WITH IFPAB DVI-D-DL

ALL NVIDIA DESIGN SPECIFICATIONS, REFERENCE SPECIFICATIONS, REFERENCE BOARDS, FILES, DRAWINGS, DIAGNOSTICS, LISTS AND OTHER DOCUMENTS OR INFORMATION (TOGETHER AND SEPARATELY, "MATERIALS") ARE BEING PROVIDED "AS IS". THE MATERIALS
FULL
CONTAIN KNOWN AND UNKNOWN VIOLATIONS OR DEVIATIONS OF INDUSTRY STANDARDS AND SPECIFICATIONS. NVIDIA MAKES NO WARRANTIES, EXPRESSED, IMPLIED, STATUTORY OR OTHERWISE WITH RESPECT TO THE MATERIALS OR OTHERWISE, AND EXPRESSLY DISCLAIMS
ALL
IMPLIED WARRANTIES INCLUDING, WITHOUT LIMITATION, THE WARRANTIES OF DESIGN, OF NONINFRINGEMENT, MERCHANTABILITY OR FITNESS FOR A PARTICULAR PURPOSE, OR ARISING FROM A COURSE OF DEALING, TRADE USAGE, TRADE PRACTICE, OR INDUSTRY
STANDARDS.

ASSEMBLY	<ASSEMBLY_DESCRIPTION>
PAGE DETAIL	12 - IFPA DP

NVIDIA CORPORATION
2701 SAN TOMAS
EXPRESSWAY
SANTA CLARA, CA 95050, USA

NV_PN	600-1G161-BASE-000		
PCB REV	PC1517-A00	PAGE	19 OF 53
BOM REV	A	DATE	21-OCT-2016

Page20: IFPE & IFPF USB-C NC

IFPF NC

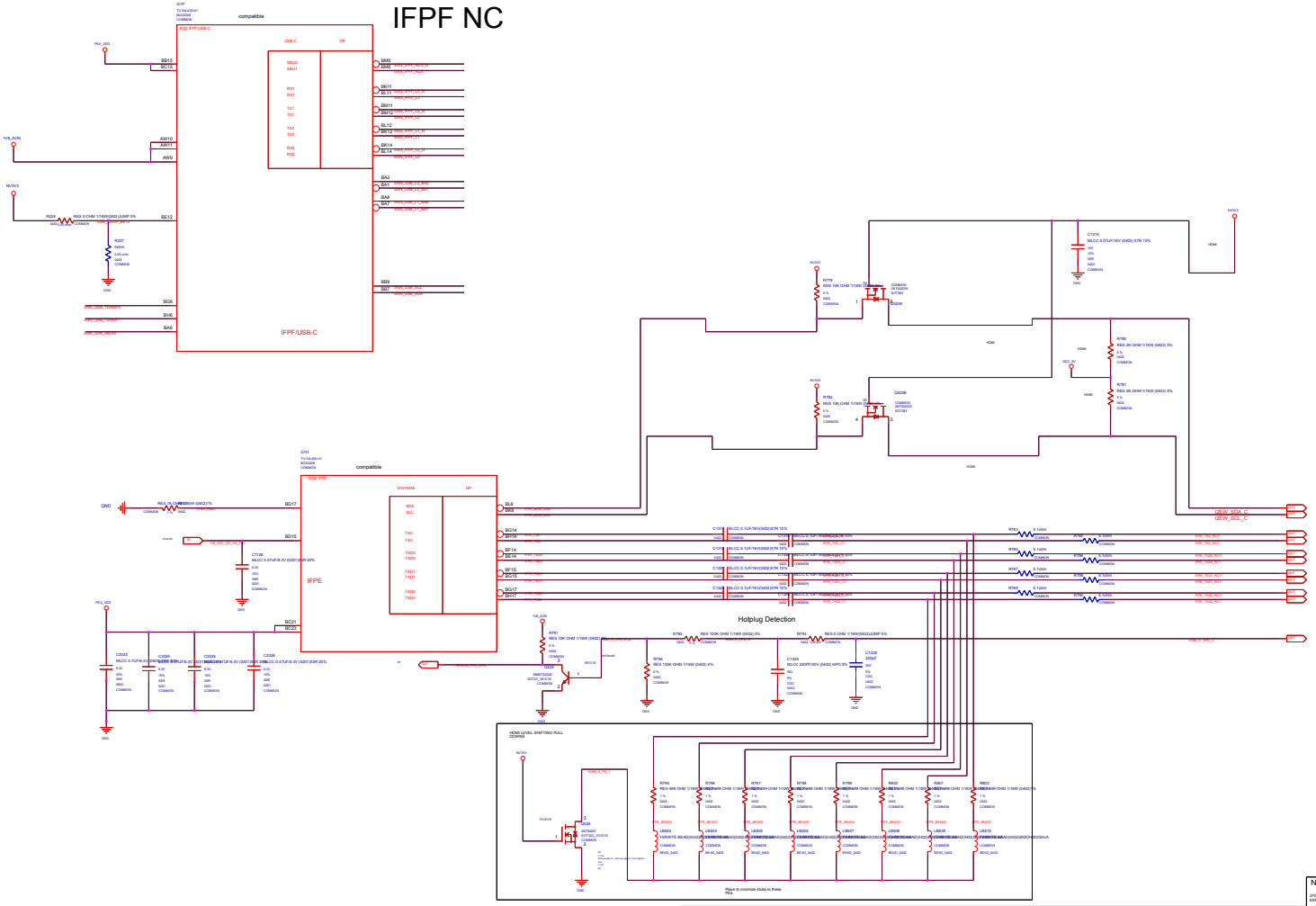

NVIDIA CORPORATION
2701 SAN TOMAS EXPRESSWAY
SANTA CLARA, CA 95050, USA

NV_PN	600-1G161-BASE-000		
PCB REV	PG161-A00	PAGE	21 OF 53
BOM REV	A	DATE	

ASSEMBLY: <ASSEMBLY_DESCRIPTION>
PAGE DETAIL:

ID: IFPE & IFPF USBC NC

ALL NVIDIA DESIGN SPECIFICATIONS, REFERENCE SPECIFICATIONS, REFERENCE BOARDS, FILES, DRAWINGS, DIAGNOSTICS, LISTS AND OTHER DOCUMENTS OR INFORMATION (TOGETHER AND SEPARATELY "MATERIALS") ARE BEING PROVIDED "AS IS". THE MATERIALS ARE:
(1) NOT KNOWN AND UNKNOWN VIOLATIONS OR DEVIATIONS OF INDUSTRY STANDARDS AND SPECIFICATIONS. NVIDIA MAKES NO WARRANTIES, EXPRESSED, IMPLIED, STATUTORY OR OTHERWISE WITH RESPECT TO THE MATERIALS OR OTHERWISE, AND EXPRESSLY DISCLAIMS ANY
IMPLIED WARRANTIES INCLUDING, WITHOUT LIMITATION, THE WARRANTIES OF DESIGN, OF NONINFRINGEMENT, MERCHANTABILITY OR FITNESS FOR A PARTICULAR PURPOSE, OR ARISING FROM A COURSE OF DEALING, TRADE USAGE, TRADE PRACTICE, OR INDUSTRY STANDARDS.

21-OCT-2016

Page22: IFPC HDMI

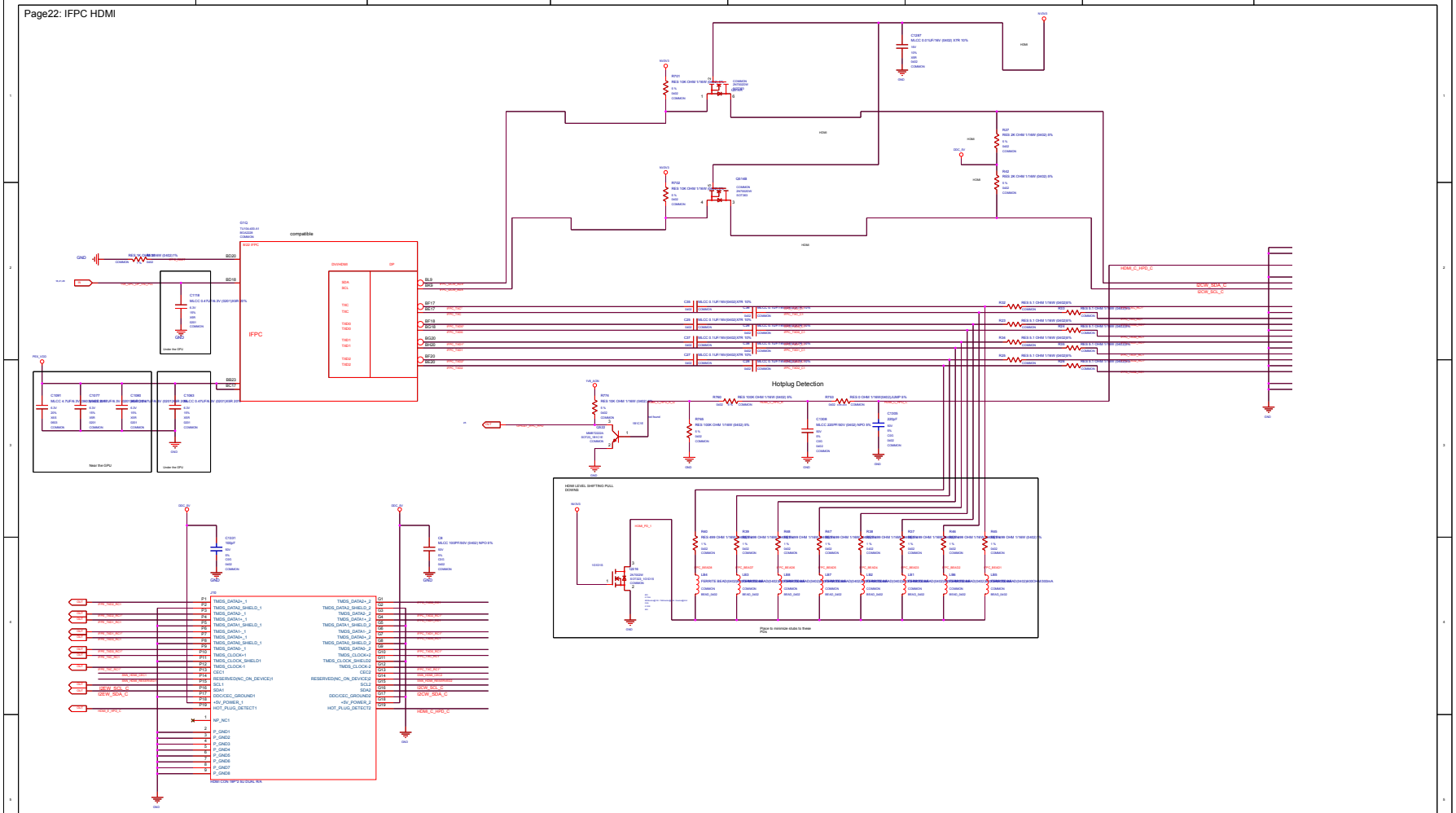

ASSEMBLY	<ASSEMBLY_DESCRIPTION>
PAGE DETAIL	22: IFPC HDMI

ALL NVIDIA DESIGN SPECIFICATIONS, REFERENCE SPECIFICATIONS, REFERENCE BOARDS, FILES, DRAWINGS, DIAGNOSTICS, LISTS AND OTHER DOCUMENTS OR INFORMATION (TOGETHER AND SEPARATELY, "MATERIALS") ARE BEING PROVIDED "AS IS". THE MATERIALS MAY CONTAIN KNOWN AND UNKNOWN VIOLATIONS OR DEVIATIONS OF INDUSTRY STANDARDS AND SPECIFICATIONS. NVIDIA MAKES NO WARRANTIES, EXPRESSED, IMPLIED, STATUTORY OR OTHERWISE WITH RESPECT TO THE MATERIALS OR OTHERWISE, AND EXPRESSLY DISCLAIMS IMPLIED WARRANTIES INCLUDING, WITHOUT LIMITATION, THE WARRANTIES OF DESIGN, OF NONINFRINGEMENT, MERCHANTABILITY OR FITNESS FOR A PARTICULAR PURPOSE, OR ARISING FROM A COURSE OF DEALING, TRADE USAGE, TRADE PRACTICE, OR INDUSTRY STANDARDS.

NVIDIA CORPORATION
2701 SAN TOMAS
EXPRESSWAY
SANTA CLARA, CA 95050 USA

NV_PN	600-1G161-BASE-000		
PCB REV	PG161-A00	PAGE	22 OF 53
NEW REV	A	DATE	21-OCT-2016

Page23: IFPD DP

Two cases to be considered:

1. DP AUX to DP connector: AUX AC coupled
2. DP AUX to DP-DVI dongle: AUX pass through

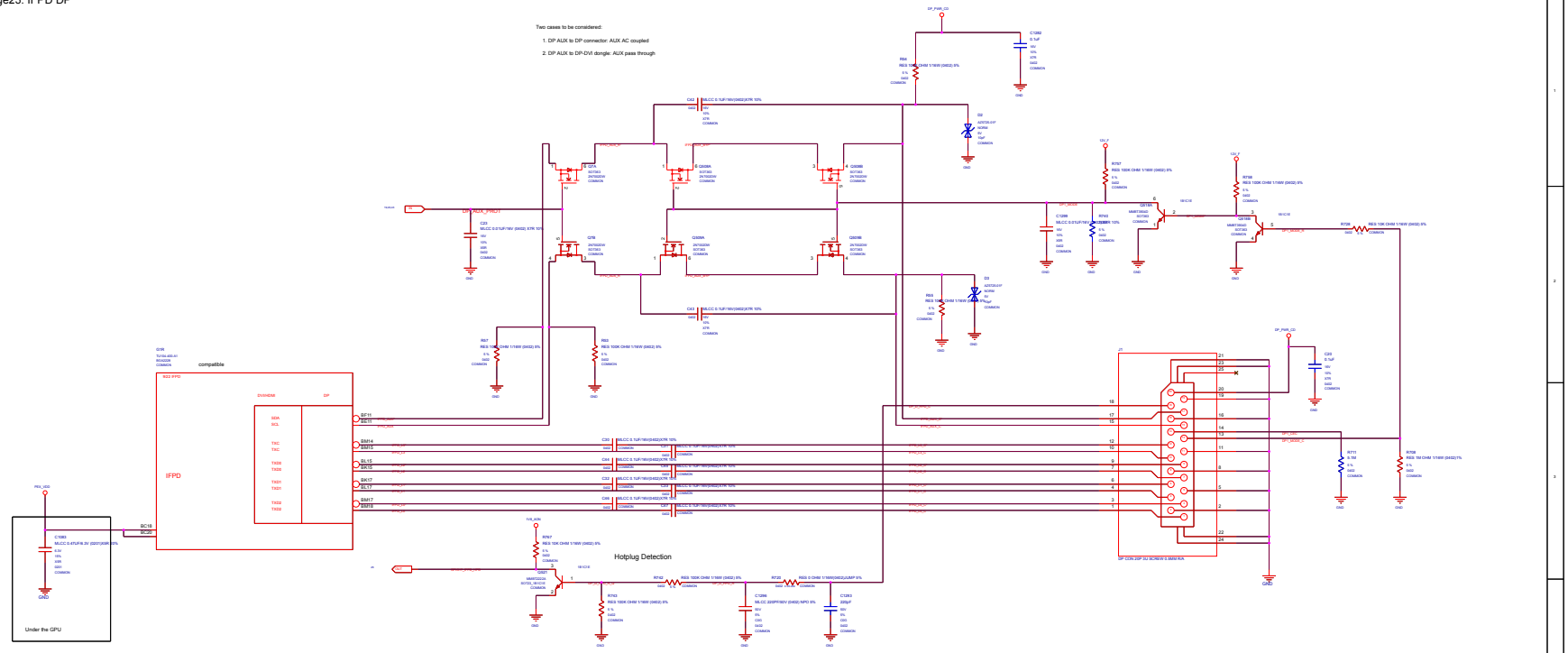

Fused DP_PWR

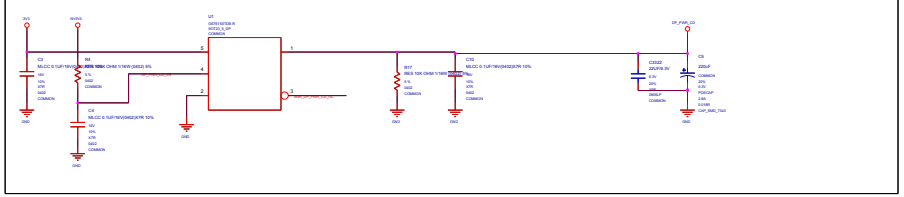

ASSEMBLY	<ASSEMBLY_DESCRIPTION>
PAGE DETAIL	63: IFPD DP

ALL NVIDIA DESIGN SPECIFICATIONS, REFERENCE SPECIFICATIONS, REFERENCE BOARDS, FILES, DRAWINGS, DIAGNOSTICS, LISTS AND OTHER DOCUMENTS OR INFORMATION (TOGETHER AND SEPARATELY, "MATERIALS") ARE BEING PROVIDED "AS IS". THE MATERIALS MAY
1. CONTAIN KNOWN AND UNKNOWN VIOLATIONS OR DEVIATIONS OF INDUSTRY STANDARDS AND SPECIFICATIONS. NVIDIA MAKES NO WARRANTIES, EXPRESSED, IMPLIED, STATUTORY OR OTHERWISE WITH RESPECT TO THE MATERIALS OR OTHERWISE, AND EXPRESSLY DISCLAIMS ALL
2. IMPLIED WARRANTIES INCLUDING, WITHOUT LIMITATION, THE WARRANTIES OF DESIGN, OF NONINFRINGEMENT, MERCHANTABILITY OR FITNESS FOR A PARTICULAR PURPOSE, OR ARISING FROM A COURSE OF DEALING, TRADE USAGE, TRADE PRACTICE, OR INDUSTRY STANDARDS.

NVIDIA CORPORATION
2701 SAN TOMAS
EXPRESSWAY
SANTA CLARA, CA 95050, USA

NV_PN	600-1G161-BASE-000		
PCB REV	PG161-A00	PAGE	23 OF 53
BOM REV	A	DATE	21-OCT-2016

Page24: NVHS Interface and Frame Lock

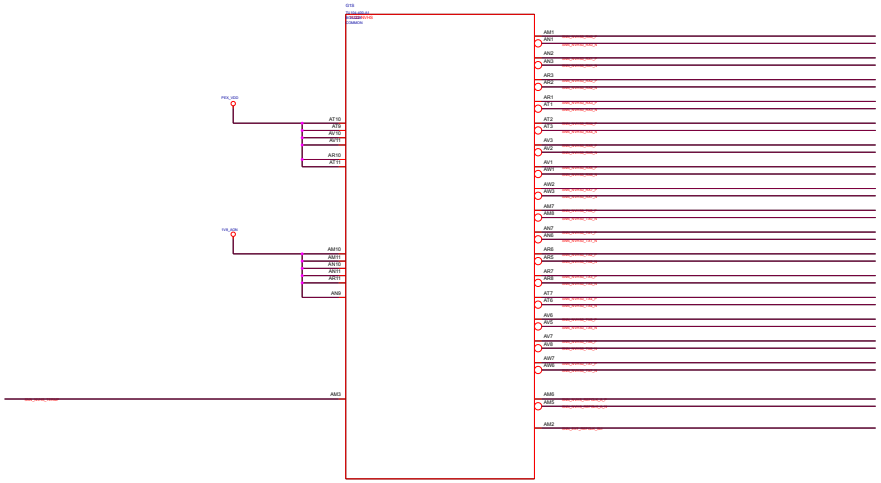

ASSEMBLY	<ASSEMBLY_DESCRIPTION>
PAGE DETAIL	21: NVHS Interface and Frame Lock

ALL NVIDIA DESIGN SPECIFICATIONS, REFERENCE SPECIFICATIONS, REFERENCE BOARDS, FILES, DRAWINGS, DIAGNOSTICS, LISTS AND OTHER DOCUMENTS OR INFORMATION (TOGETHER AND SEPARATELY, "MATERIALS") ARE BEING PROVIDED "AS IS". THE MATERIALS
MAY
CONTAIN KNOWN AND UNKNOWN VIOLATIONS OR DEVIATIONS OF INDUSTRY STANDARDS AND SPECIFICATIONS. NVIDIA MAKES NO WARRANTIES, EXPRESSED, IMPLIED, STATUTORY OR OTHERWISE WITH RESPECT TO THE MATERIALS OR OTHERWISE, AND EXPRESSLY DISCLAIMS
ALL
EXPRESS AND IMPLIED WARRANTIES INCLUDING, WITHOUT LIMITATION, THE WARRANTIES OF DESIGN, OF NONINFRINGEMENT, MERCHANTABILITY OR FITNESS FOR A PARTICULAR PURPOSE, OR ARISING FROM A COURSE OF DEALING, TRADE USAGE, TRADE PRACTICE, OR INDUSTRY
STANDARDS.

NVIDIA CORPORATION
2701 SAN TOMAS
EXPRESSWAY
SANTA CLARA, CA 95050, USA

NV_PN	600-1G161-BASE-000		
PCB REV	PG161-A00	PAGE	24 OF 53
BOM REV	A	DATE	21-OCT-2015

Page25: MISC1: Fan, Thermal, JTAG, GPIO

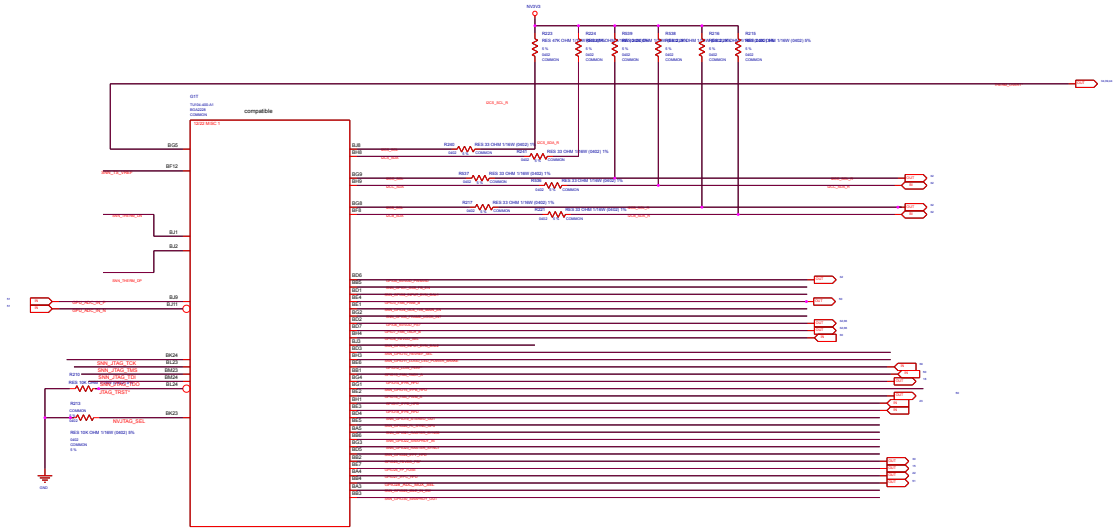

ASSEMBLY	<ASSEMBLY_DESCRIPTION>
PAGE DETAIL	<SHEET: "Page25: JTAG, GPIO, LEDBG">

ALL NVIDIA DESIGN SPECIFICATIONS, REFERENCE SPECIFICATIONS, REFERENCE BOARDS, FILES, DRAWINGS, DIAGNOSTICS, LISTS AND OTHER DOCUMENTS OR INFORMATION (TOGETHER AND SEPARATELY, "MATERIALS") ARE BEING PROVIDED "AS IS". THE MATERIALS MAY CONTAIN KNOWN AND UNKNOWN VIOLATIONS OR DEVIATIONS OF INDUSTRY STANDARDS AND SPECIFICATIONS. NVIDIA MAKES NO WARRANTIES, EXPRESSED, IMPLIED, STATUTORY OR OTHERWISE WITH RESPECT TO THE MATERIALS OR OTHERWISE, AND EXPRESSLY DISCLAIMS ALL IMPLIED WARRANTIES INCLUDING, WITHOUT LIMITATION, THE WARRANTIES OF DESIGN, OF NONINFRINGEMENT, MERCHANTABILITY OR FITNESS FOR A PARTICULAR PURPOSE, OR ARISING FROM A COURSE OF DEALING, TRADE USAGE, TRADE PRACTICE, OR INDUSTRY STANDARDS.

NVIDIA CORPORATION
2701 SAN TOMAS
EXPRESSWAY
SANTA CLARA, CA 95050, USA

NV_PN	600-1G161-BASE-000		
PCB REV	PG161-A00	PAGE	25 OF 53
BOM REV	A	DATE	21-OCT-2015

Page26: MISC2: ROM, XTAL, Straps

STRAP2	STRAP1	STRAP0	RAMCFG[4:0]
L	L	L	00000
L	L	H	00001
L	H	L	00010
L	H	H	00011
H	H	L	00110
H	H	H	00111
L	L	M	01000

RAMCFG[4:0]	DENSITY	WIDTH	VENDOR	DIE
00000	8Gb	256-bit	Samsung	C
00001	8Gb	256-bit	Micron	A
00010	8Gb	256-bit	Hynix	M
00011	8Gb	256-bit	Samsung	C
00100	8Gb	256-bit	Micron	A
00101	8Gb	256-bit	Hynix	M
00110	16Gb	256-bit	Samsung	M
00111				

ROM_SO	ROM_SI	ROM_SCLK	DUMMY[2:0],FS_OVERT	1:ENABLE 0:DISABLE	
L	L	L	XXX1	FS_OVERT ENABLE	DEFAULT
L	L	M	XXX0	FS_OVERT DISABLE	

STRAP5	STRAP4	STRAP3	SMB_ALT_ADDR	DEVID_SEL	PCIE_CFG	VGA_DEVICE
M	H	H	1	1	1	1
M	H	L	1	1	1	0
M	L	H	1	1	0	1
M	L	L	1	1	0	0
L	H	M	1	0	1	1
L	M	H	1	0	1	0
L	M	L	1	0	0	1
L	L	M	1	0	0	0
H	H	H	0	1	1	1
H	H	L	0	1	1	0
H	L	H	0	1	0	1
H	L	L	0	1	0	0
L	H	H	0	0	1	1
L	H	L	0	0	1	0
L	L	H	0	0	0	1 DEFAULT
L	L	L	0	0	0	0

H=High :Tied to 1.8V
M=Middle:Tied to 0.9V
L=Low :Tied to 0V

1:SMB_ALT_ADDR ENABLE
0:SMB_ALT_ADDR DISABLE

1:DEVID_SEL REBRAND
0:DEVID_SEL ORIGINAL

1:PCIE_CFG LOW POWER
0:PCIE_CFG HIGH POWER

1:VGA_DEVICE ENABLE
0:VGA_DEVICE DISABLE

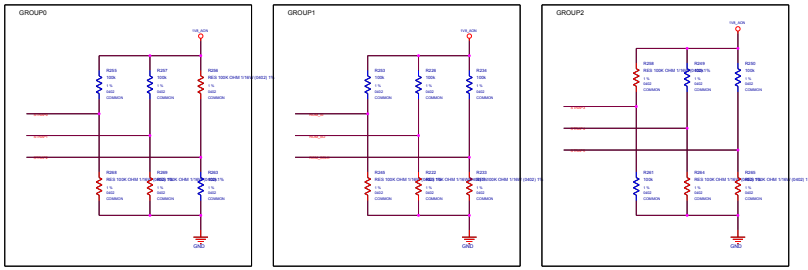

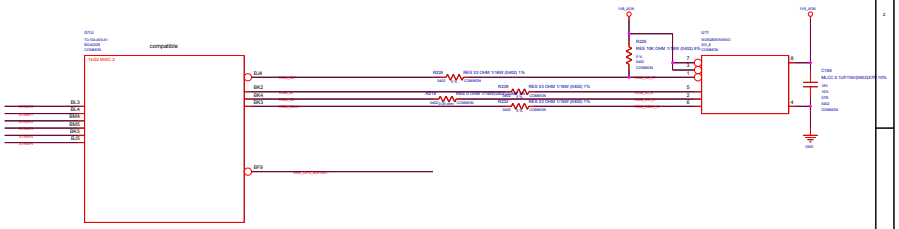

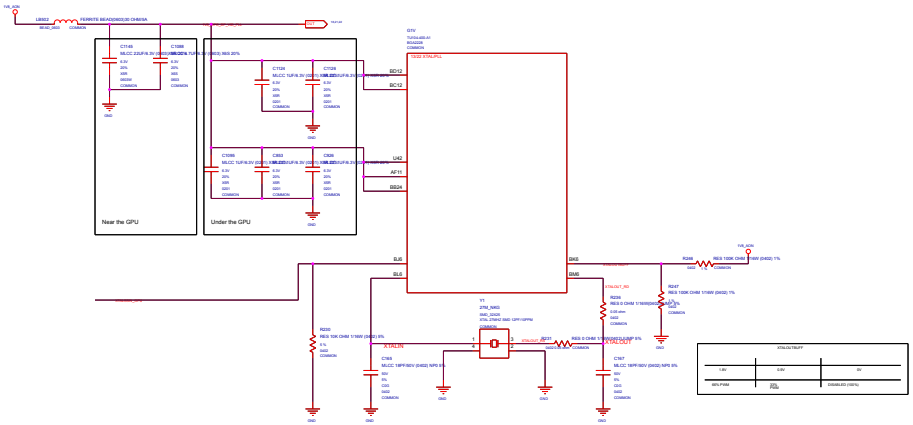

ASSEMBLY	<ASSEMBLY_DESCRIPTION>
PAGE DETAIL	MISC2: ROM, XTAL,STRAPS

ALL NVIDIA DESIGN SPECIFICATIONS, REFERENCE SPECIFICATIONS, REFERENCE BOARDS, FILES, DRAWINGS, DIAGNOSTICS, LISTS AND OTHER DOCUMENTS OR INFORMATION (TOGETHER AND SEPARATELY, "MATERIALS") ARE BEING PROVIDED "AS IS". THE MATERIALS MAY CONTAIN KNOWN AND UNKNOWN VIOLATIONS OR DEVIATIONS OF INDUSTRY STANDARDS AND SPECIFICATIONS. NVIDIA MAKES NO WARRANTIES, EXPRESSED, IMPLIED, STATUTORY OR OTHERWISE WITH RESPECT TO THE MATERIALS OR OTHERWISE, AND EXPRESSLY DISCLAIMS ALL IMPLIED WARRANTIES INCLUDING, WITHOUT LIMITATION, THE WARRANTIES OF DESIGN, OF NONINFRINGEMENT, MERCHANTABILITY OR FITNESS FOR A PARTICULAR PURPOSE, OR ARISING FROM A COURSE OF DEALING, TRADE USAGE, TRADE PRACTICE, OR INDUSTRY STANDARDS.

NVIDIA CORPORATION
2701 SAN TOMAS
EXPRESSWAY
SANTA CLARA, CA 95050, USA

NV_PN	600-1G161-BASE-000		
PCB REV	PG161-A00	PAGE	26 OF 33
BOM REV	A	DATE	21-OCT-2016

Page27: PS: 1V8_AON

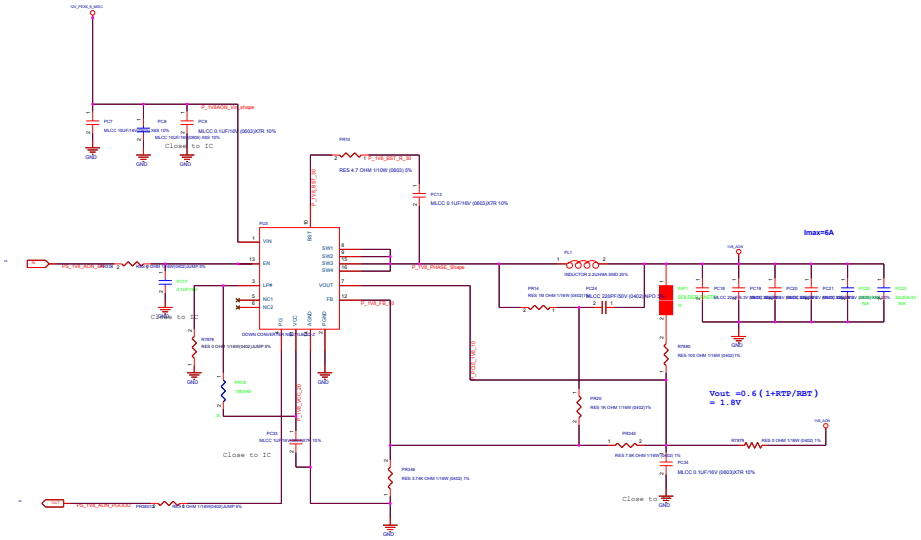

ASSEMBLY	<ASSEMBLY_DESCRIPTION>
PAGE DETAIL	PS: 1V8_AON

ALL NVIDIA DESIGN SPECIFICATIONS, REFERENCE SPECIFICATIONS, REFERENCE BOARDS, FILES, DRAWINGS, DIAGNOSTICS, LISTS AND OTHER DOCUMENTS OR INFORMATION (TOGETHER AND SEPARATELY, "MATERIALS") ARE BEING PROVIDED "AS IS". THE MATERIALS ARE
NOT A COMMERCIAL PRODUCT, AND HAVE NOT BEEN TESTED FOR QUALITY OR PERFORMANCE.
NVIDIA MAKES NO WARRANTIES, EXPRESSED, IMPLIED, STATUTORY, OR OTHERWISE WITH RESPECT TO THE MATERIALS OR
OTHERWISE, AND ADDITIONALLY DISCLAIMS ANY
IMPLIED WARRANTIES INCLUDING, WITHOUT LIMITATION, THE WARRANTIES OF DESIGN, OF NONINFRINGEMENT, MERCHANTABILITY OR FITNESS FOR A PARTICULAR PURPOSE, OR ARISING FROM A COURSE OF DEALING, TRADE USAGE,
TRADE PRACTICE, OR INDUSTRY STANDARDS.

NVIDIA CORPORATION
2701 SAN TOMAS
EXPRESSWAY
SANTA CLARA, CA 95050, USA

NV_PN	600-1G161-BASE-000		
PCB REV	PG161-A00	PAGE	27 OF 53
BOM REV	A	DATE	21-OCT-2016

Page28: PS: 5V

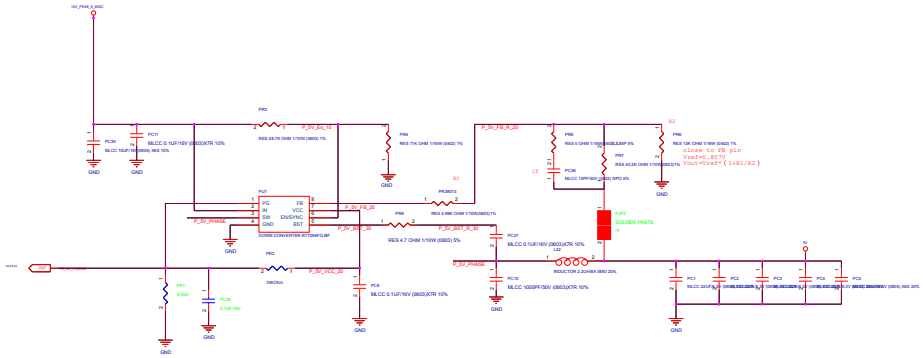

ASSEMBLY	<ASSEMBLY_DESCRIPTION>
PAGE DETAIL	PS: 5V

ALL NVIDIA DESIGN SPECIFICATIONS, REFERENCE SPECIFICATIONS, REFERENCE BOARDS, FILES, DRAWINGS, DIAGNOSTICS, LISTS AND OTHER DOCUMENTS OR INFORMATION (TOGETHER AND SEPARATELY, "MATERIALS") ARE BEING PROVIDED "AS IS". THE MATERIALS COMPRISE TRADE SECRETS AND CONFIDENTIAL INFORMATION OF NVIDIA AND CONTAIN VARIOUS OR DEVIATIONS OF INDUSTRY STANDARDS AND SPECIFICATIONS. NVIDIA MAKES NO WARRANTIES, EXPRESSED, IMPLIED, STATUTORY, OR OTHERWISE WITH RESPECT TO THE MATERIALS OR OTHERWISE, AND EXPRESSLY DISCLAIMS ALL IMPLIED WARRANTIES, INCLUDING, WITHOUT LIMITATION, THE WARRANTIES OF DESIGN, OF NONINFRINGEMENT, MERCHANTABILITY OR FITNESS FOR A PARTICULAR PURPOSE, OR ARISING FROM A COURSE OF DEALING, TRADE USAGE, TRADE PRACTICE, OR INDUSTRY STANDARDS.

NVIDIA CORPORATION
2701 SAN TOMAS
EXPRESSWAY
SANTA CLARA, CA 95050, USA

NV_PN	1-600-1C161-BASE-000		
PCB REV	PCI-E1-AD	PAGE	28 OF 53
BOM REV	PART NUMBER <NULL>	DATE	21-OCT-2016
DATE	Monday, November 12, 2018	SHEET 4 OF 9	

Page29: PS: PEXVDD

PEX Switcher

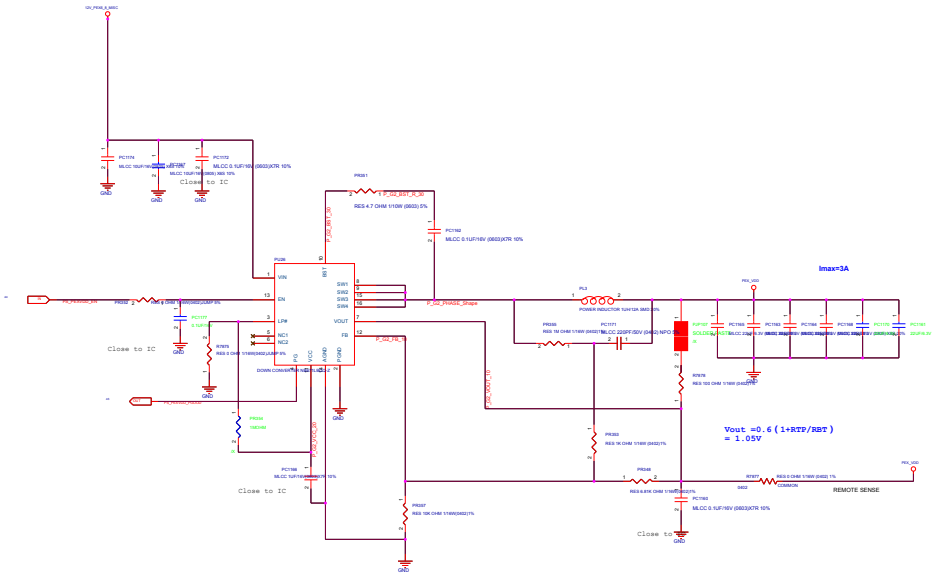

ASSEMBLY	<ASSEMBLY_DESCRIPTION>
PAGE DETAIL	PE PEXVDD

ALL NVIDIA DESIGN SPECIFICATIONS, REFERENCE SPECIFICATIONS, REFERENCE BOARDS, FILES, DRAWINGS, DIAGNOSTICS, LISTS AND OTHER DOCUMENTS OR INFORMATION (TOGETHER AND SEPARATELY, "MATERIALS") ARE BEING PROVIDED "AS IS". THE MATERIALS
MAY
CONTAIN KNOWN AND UNKNOWN VIOLATIONS OR DEVIATIONS OF INDUSTRY STANDARDS AND SPECIFICATIONS. NVIDIA MAKES NO WARRANTIES, EXPRESSED, IMPLIED, STATUTORY OR OTHERWISE WITH RESPECT TO THE MATERIALS OR OTHERWISE, AND
EXPRESSLY DISCLAIMS ALL
IMPLIED WARRANTIES INCLUDING, WITHOUT LIMITATION, THE WARRANTIES OF DESIGN, OF NONINFRINGEMENT, MERCHANTABILITY OR FITNESS FOR A PARTICULAR PURPOSE, OR ARISING FROM A COURSE OF DEALING, TRADE USAGE, TRADE PRACTICE,
OR INDUSTRY STANDARDS.

NVIDIA CORPORATION
2701 SAN TOMAS
EXPRESSWAY
SANTA CLARA, CA 95051, USA

NV_PN	600-1G161-BASE-000		
PCB REV	PG161-A02	PAGE	29 OF 53
SCM REV	A	DATE	21-OCT-2016

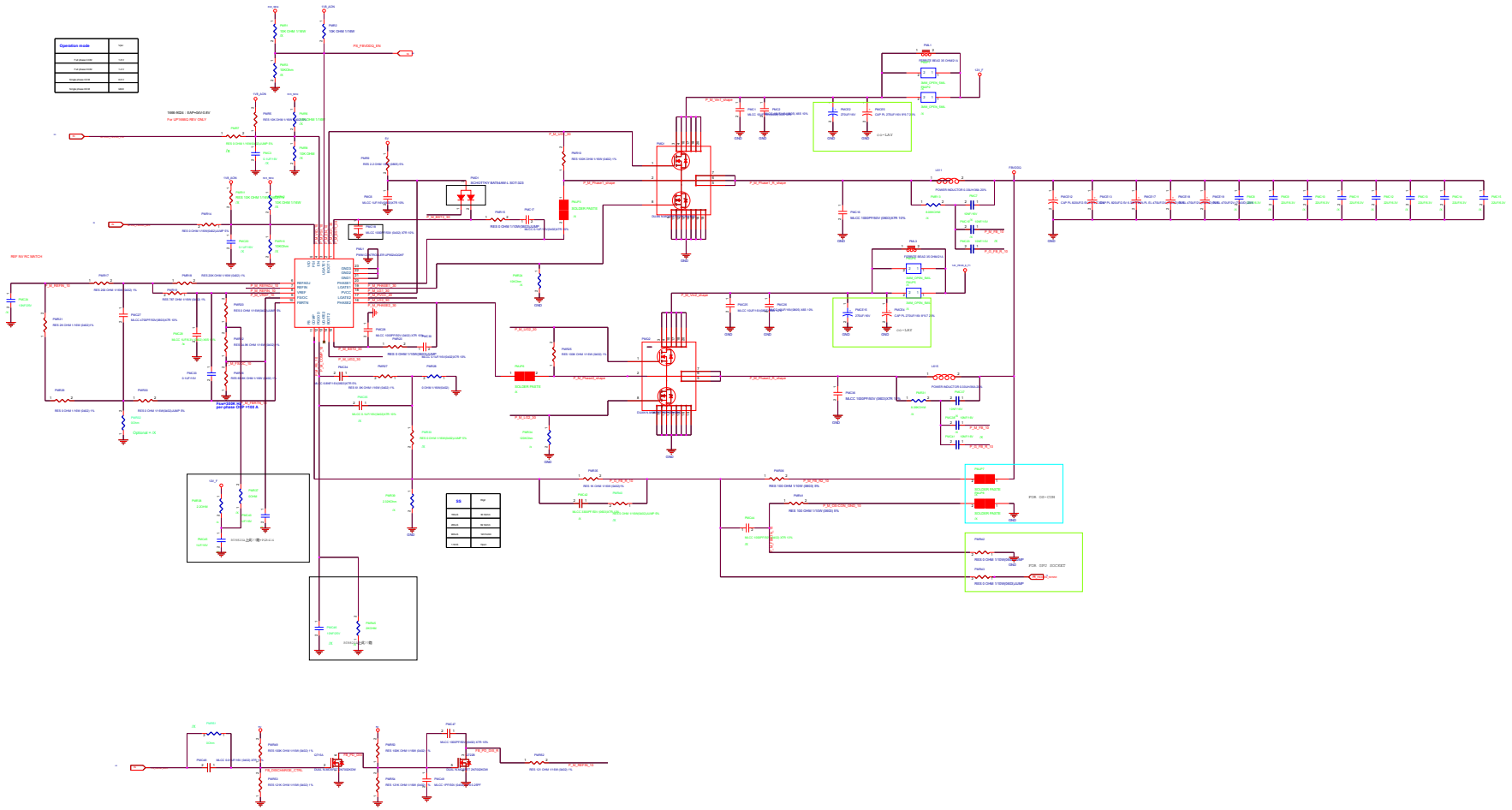
Operation mode
Vcc
Full phase(CCM)
+5.0 V
Full phase(DEM)
+5.0 V
Single phase(CCM)
+5.0 V
Single phase(DEM)
GND
1698-9024 : EAP-04V3.0-R/
For UP7588R2 REV ONLY
REF 5V RC SWITCH
Dual-CCM: 30A
per-phase CCM: 15A
Optional = 0Ω
SOLDER PASTE
FOR CS-CSN
FOR SPO SOCKET
GND

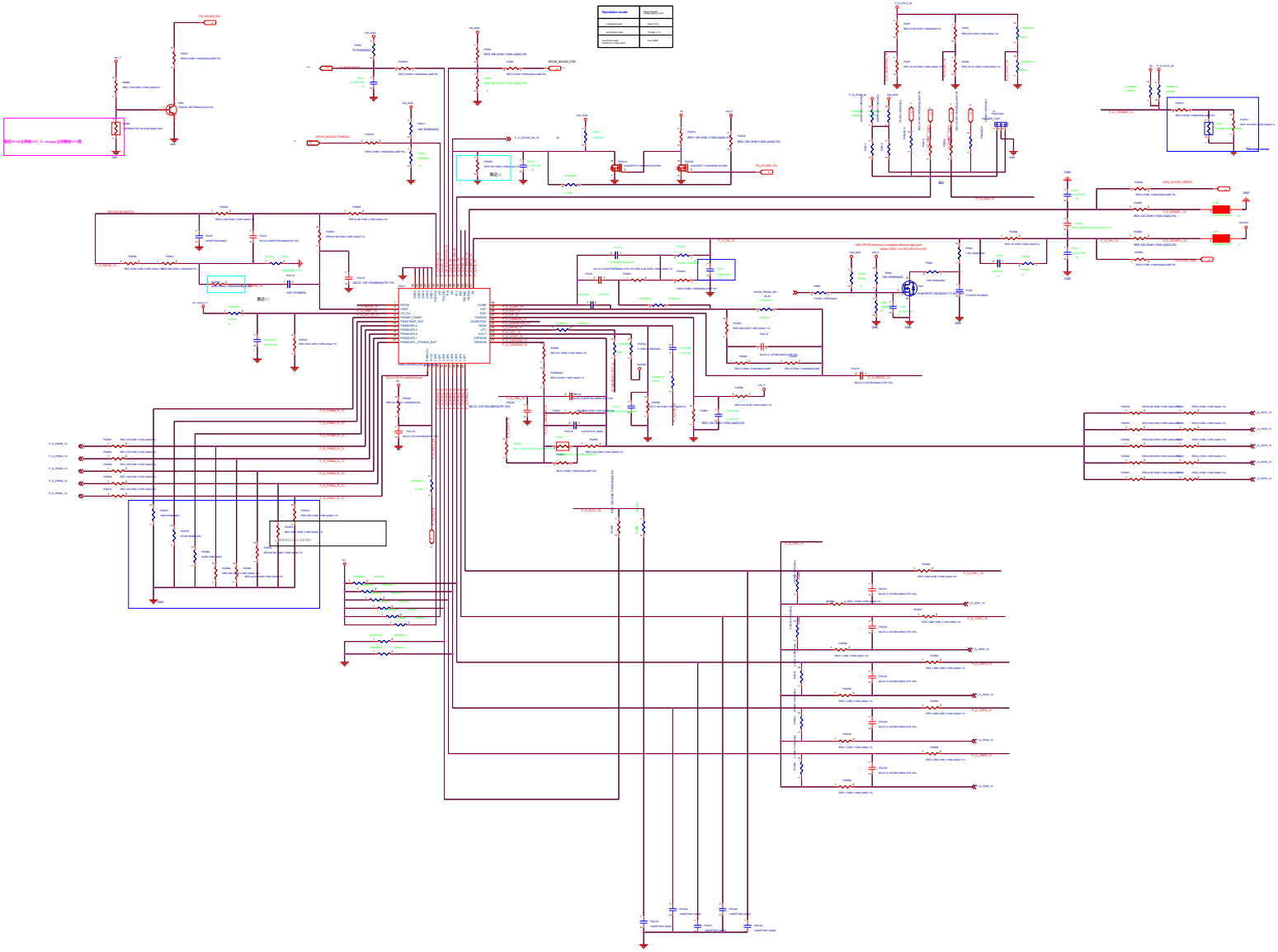
Operation mode
Thermal sensor
Thermal sensor
Thermal sensor

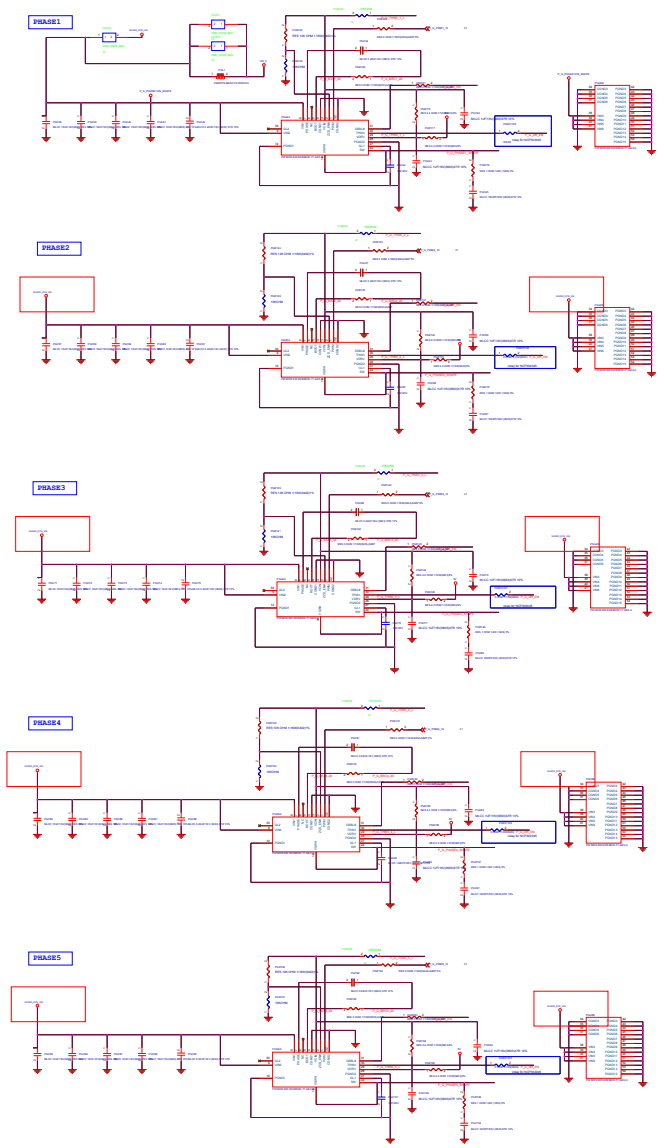

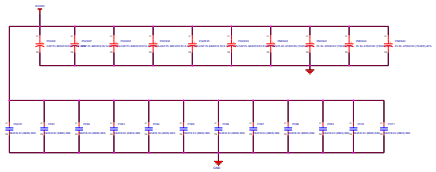

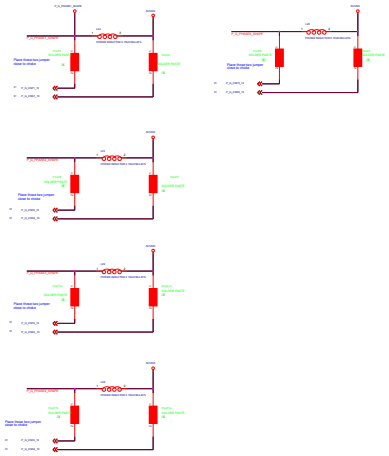

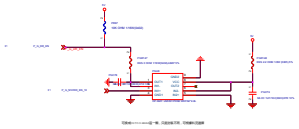

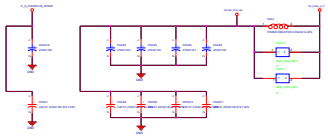

	Title :	Power Rail	
	Engineer:	Hanlaiao_Huang	
	CG16DFI		Rev

Page38: PS: Inputs, Filtering, and Monitoring

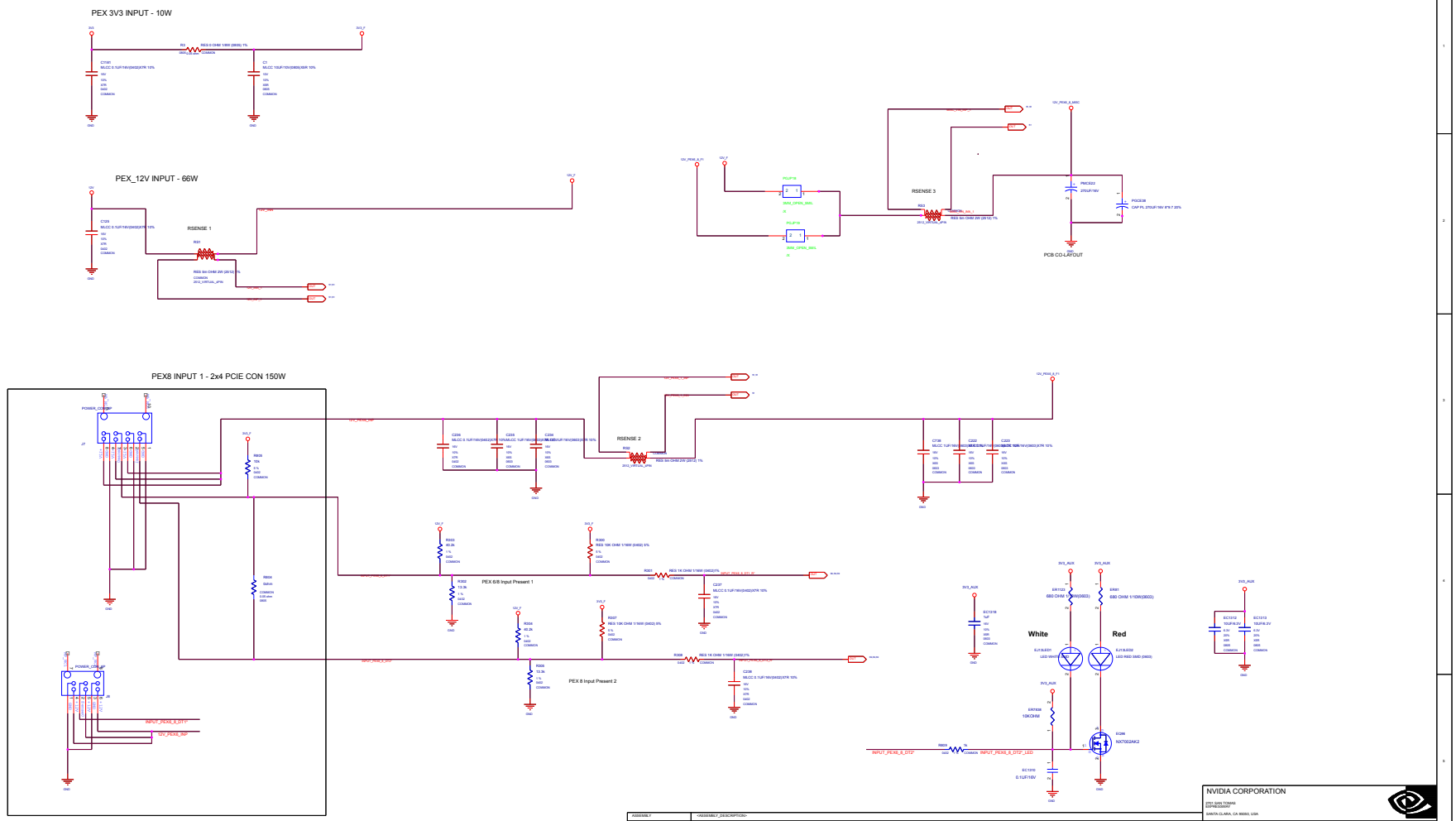

ASSEMBLY	<ASSEMBLY_DESCRIPTION>
PAGE DETAIL	PS: Input, Filtering, and Monitoring

ALL NVIDIA DESIGN SPECIFICATIONS, REFERENCE SPECIFICATIONS, REFERENCE BOARDS, FILES, DRAWINGS, DIAGNOSTICS, LISTS AND OTHER DOCUMENTS OR INFORMATION (TOGETHER AND SEPARATELY, MATERIALS") ARE BEING PROVIDED "AS IS". THE MATERIALS MAY CONTAIN KNOWN AND UNKNOWN VIOLATIONS OR DEVIATIONS OF INDUSTRY STANDARDS AND SPECIFICATIONS. NVIDIA MAKES NO WARRANTIES, EXPRESSED, IMPLIED, STATUTORY OR OTHERWISE WITH RESPECT TO THE MATERIALS OR OTHERWISE, AND EXPRESSLY DISCLAIMS ALL WARRANTIES INCLUDING, WITHOUT LIMITATION, THE WARRANTIES OF DESIGN, OF NONINFRINGEMENT, MERCHANTABILITY OR FITNESS FOR A PARTICULAR PURPOSE, OR ARISING FROM A COURSE OF DEALING, TRADE USAGE, TRADE PRACTICE, OR INDUSTRY STANDARDS.

NVIDIA CORPORATION
2701 SAN TOMAS
EXPRESSWAY
SANTA CLARA, CA 95050, USA

NV_PN	600-1G161-BASE-000		
PCB REV	PG161-A00	PAGE	38 OF 53
BOM REV	A	DATE	21-OCT-2016

Page39: PS: HOT-UNPLUG, UNDER POWER BOOT, CURRENT STEERING

PEX Input Present 1

POWER CONNECTOR HOT-UNPLUG DETECT

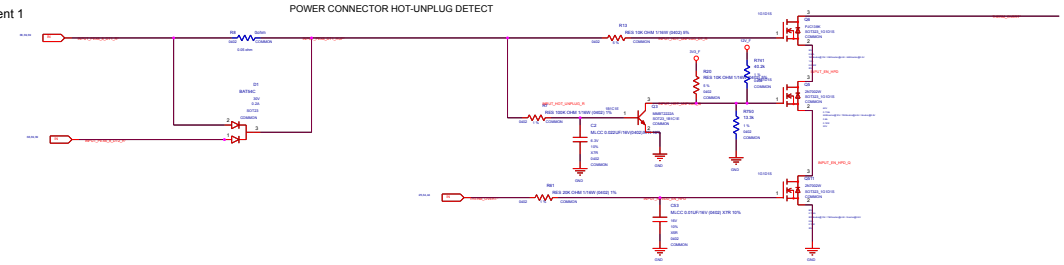

12V CURRENT STEERING (UNDER POWER BOOT):

GUIDES CURRENT FROM PEX EDGE TO PEX 8 PIN INPUT AREA

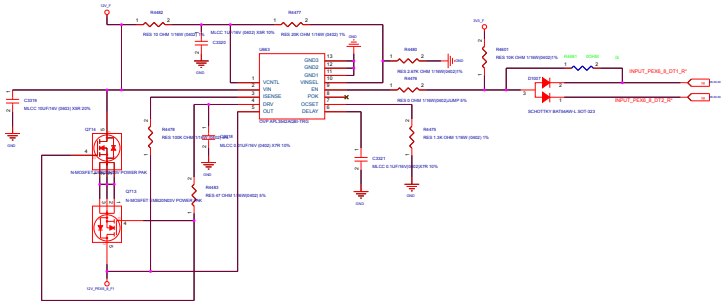

PEX Input - Power Level/PSI* Control

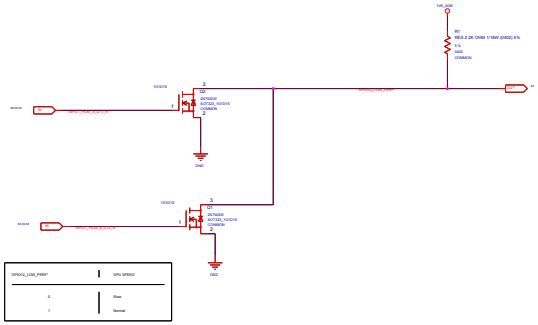

GPIO12_LOW_PERF*	GPU SPEED
0	Slow
1	Normal

ASSEMBLY	<ASSEMBLY_DESCRIPTION>
PAGE DETAIL	PS: STEERING, UPB & HOT-UNPLUG

ALL NVIDIA DESIGN SPECIFICATIONS, REFERENCE SPECIFICATIONS, REFERENCE BOARDS, FILES, DRAWINGS, DIAGNOSTICS, LISTS AND OTHER DOCUMENTS OR INFORMATION (TOGETHER AND SEPARATELY, "MATERIALS") ARE BEING PROVIDED "AS IS". THE MATERIALS MAY CONTAIN KNOWN AND UNKNOWN VIOLATIONS OR DEVIATIONS OF INDUSTRY STANDARDS AND SPECIFICATIONS. NVIDIA MAKES NO WARRANTIES, EXPRESSED, IMPLIED, STATUTORY OR OTHERWISE WITH RESPECT TO THE MATERIALS OR OTHERWISE, AND EXPRESSLY DISCLAIMS IMPLIED WARRANTIES INCLUDING, WITHOUT LIMITATION, THE WARRANTIES OF DESIGN, OF NONINFRINGEMENT, MERCHANTABILITY OR FITNESS FOR A PARTICULAR PURPOSE, OR ARISING FROM A COURSE OF DEALING, TRADE USAGE, TRADE PRACTICE, OR INDUSTRY STANDARDS.

NVIDIA CORPORATION
2701 SAN TOMAS EXPRESSWAY
SANTA CLARA, CA 95050, USA

NV_PN	600-1G161-BASE-000		
PCB REV	PG161 A00	PAGE	39 OF 53
SCM REV	A	DATE	31-OCT-2018

Page43: SEQ:5V,1V8,NV3V3 ENABLE

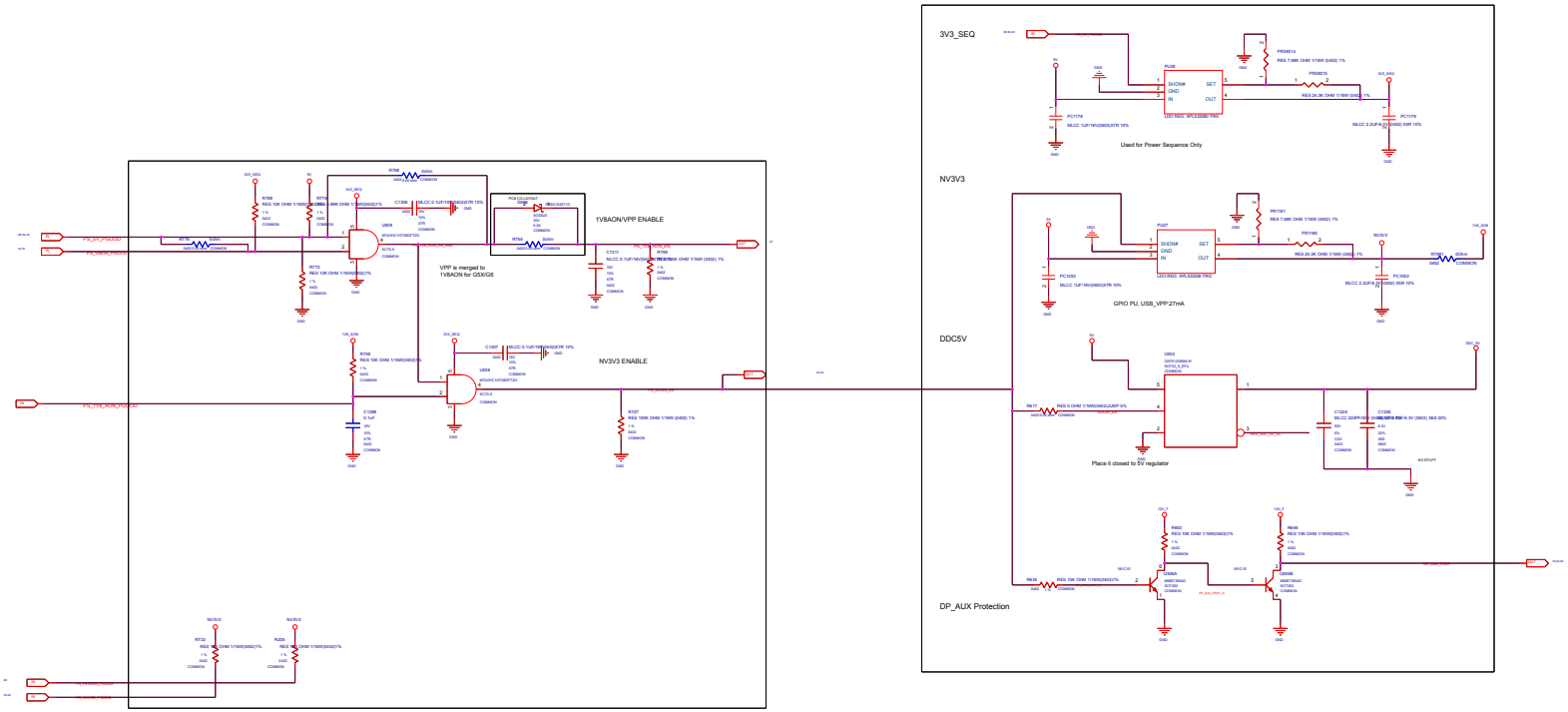

ASSEMBLY	<ASSEMBLY_DESCRIPTION>
PAGE DETAIL	SEQ: 5V, 1V8, NV3V3 ENABLE

ALL NVIDIA DESIGN SPECIFICATIONS, REFERENCE SPECIFICATIONS, REFERENCE BOARDS, FILES, DRAWINGS, DIAGNOSTICS, LISTS AND OTHER DOCUMENTS OR INFORMATION (TOGETHER AND SEPARATELY, MATERIALS) ARE BEING PROVIDED "AS IS". THE MATERIALS MAY
CONTAIN ERORR AND UNKNOWN VIOLATIONS OR DEVIATIONS OF INDUSTRY STANDARDS AND SPECIFICATIONS. NVIDIA MAKES NO WARRANTIES, EXPRESSED, IMPLIED, STATUTORY OR OTHERWISE WITH RESPECT TO THE MATERIALS OR OTHERWISE, AND EXPRESSLY
DISCLAIMS ALL
IMPLIED WARRANTIES INCLUDING, WITHOUT LIMITATION, THE WARRANTIES OF DESIGN, OF NONINFRINGEMENT, MERCHANTABILITY OR FITNESS FOR A PARTICULAR PURPOSE, OR ARISING FROM A COURSE OF DEALING, TRADE USAGE, TRADE PRACTICE, OR
INDUSTRY STANDARDS.

NVIDIA CORPORATION
2701 SAN TOMAS
EXPRESSWAY
SANTA CLARA, CA 95050, USA

NV_PN	600-1G161-BASE-000		
PCB REV	<A-Z/B1-A00>	PAGE	43 OF 52
BOM REV	X	DATE	21-OCT-2018

Page44: SEQ:NV,PEX,FB ENABLE

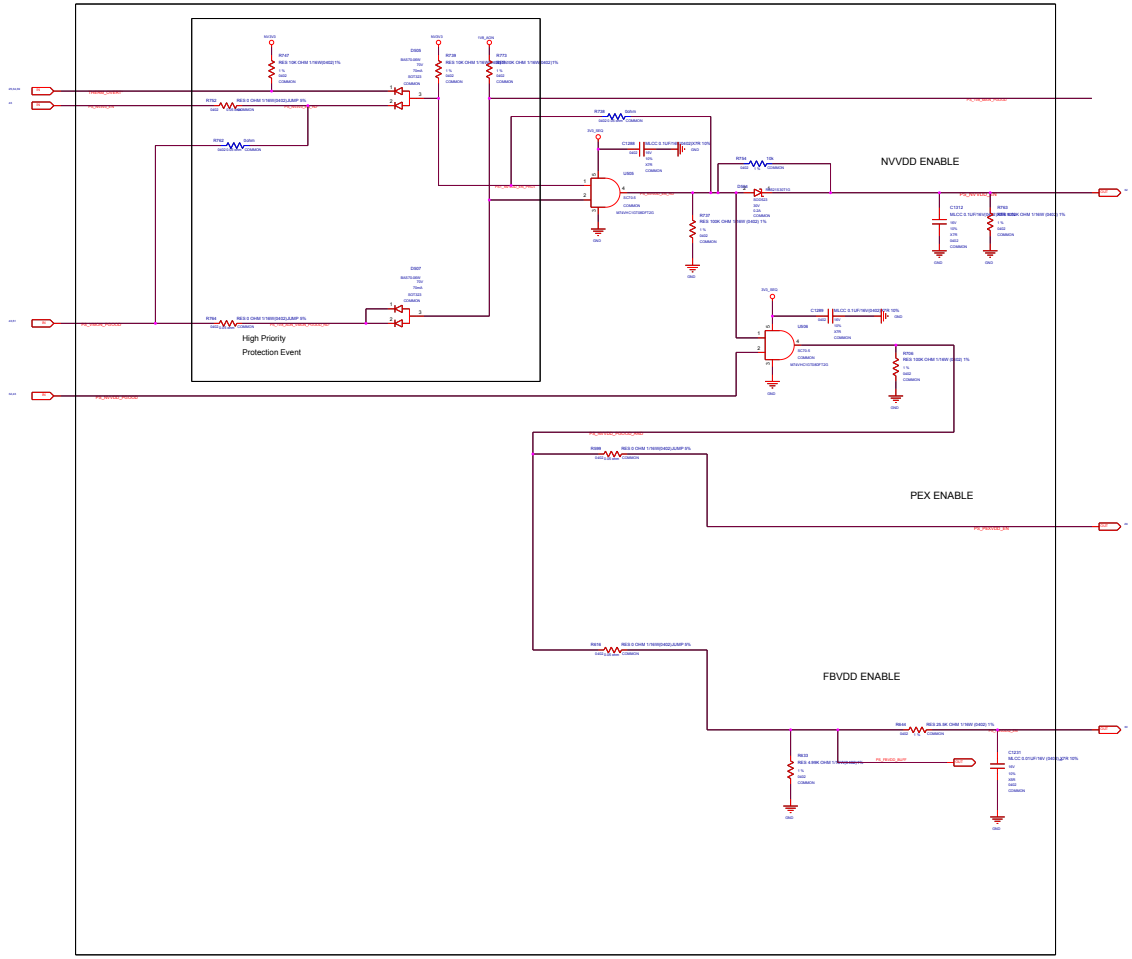

ASSEMBLY	<ASSEMBLY_DESCRIPTION>
PAGE DETAIL	SEQ: NV, PEX, FB ENABLE

ALL NVIDIA DESIGN SPECIFICATIONS, REFERENCE SPECIFICATIONS, REFERENCE BOARDS, FILES, DRAWINGS, DIAGNOSTICS, LISTS AND OTHER DOCUMENTS OR INFORMATION (TOGETHER AND SEPARATELY, "MATERIALS") ARE BEING PROVIDED "AS IS". THE MATERIALS MAY CONTAIN KNOWN AND UNKNOWN VIOLATIONS OR DEVIATIONS OF INDUSTRY STANDARDS AND SPECIFICATIONS. NVIDIA MAKES NO WARRANTIES, EXPRESSED, IMPLIED, STATUTORY OR OTHERWISE WITH RESPECT TO THE MATERIALS OR OTHERWISE, AND EXPRESSLY DISCLAIMS ALL IMPLIED WARRANTIES INCLUDING, WITHOUT LIMITATION, THE WARRANTIES OF DESIGN, OF NONINFRINGEMENT, MERCHANTABILITY OR FITNESS FOR A PARTICULAR PURPOSE, OR ARISING FROM A COURSE OF DEALING, TRADE USAGE, TRADE PRACTICE, OR INDUSTRY STANDARDS.

NVIDIA CORPORATION
2701 SAN TOMAS
SANTA CLARA
SANTA CLARA, CA 95050, USA

NV_PN	600-1G161-BASE-000		
PCB REV	PG161-A00	PAGE	44 OF 53
BOM REV	A	DATE	31-OCT-2018

Page47: SEQUENCE:MISC

PEX_CLKREQ*

PU ON GPU SIDE

NC ON GOLD FINGER SIDE

GPU_WAKE*

PU ON GPU SIDE

NC ON GOLD FINGER SIDE

PEX_RST# LOGIC

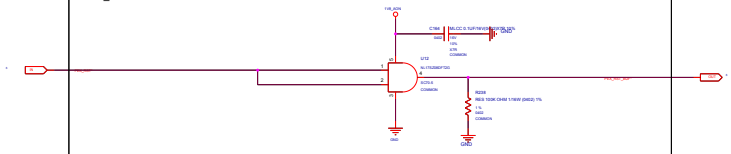

ALL NVIDIA DESIGN SPECIFICATIONS, REFERENCE SPECIFICATIONS, REFERENCE BOARDS, FILES, DRAWINGS, DIAGNOSTICS, LISTS AND OTHER DOCUMENTS OR INFORMATION (TOGETHER AND SEPARATELY, "MATERIALS") ARE BEING PROVIDED "AS IS". THE MATERIALS
COMPRISE
CERTAIN KNOWN AND UNKNOWN VIOLATIONS OR DEVIATIONS OF INDUSTRY STANDARDS AND SPECIFICATIONS. NVIDIA MAKES NO WARRANTIES, EXPRESSED, IMPLIED, STATUTORY OR OTHERWISE WITH RESPECT TO THE MATERIALS OR OTHERWISE, AND ALL EXPRESSLY DISCLAIMS
IMPLIED WARRANTIES INCLUDING, WITHOUT LIMITATION, THE WARRANTIES OF DESIGN, OF NONINFRINGEMENT, MERCHANTABILITY OR FITNESS FOR A PARTICULAR PURPOSE, OR ARISING FROM A COURSE OF DEALING, TRADE USAGE, TRADE PRACTICE, OR INDUSTRY
STANDARDS.

ASSEMBLY	<ASSEMBLY_DESCRIPTION>
PAGE DETAIL	SEQ: MISC

NVIDIA CORPORATION
2701 SAN TOMAS
EXPRESSWAY
SANTA CLARA, CA 95050, USA

NV_PN	600-1G161-BASE-000		
PCB REV	PG161-A00	PAGE	47 OF 53
BOM REV	X	DATE	21-OCT-2016

Page50: FAN

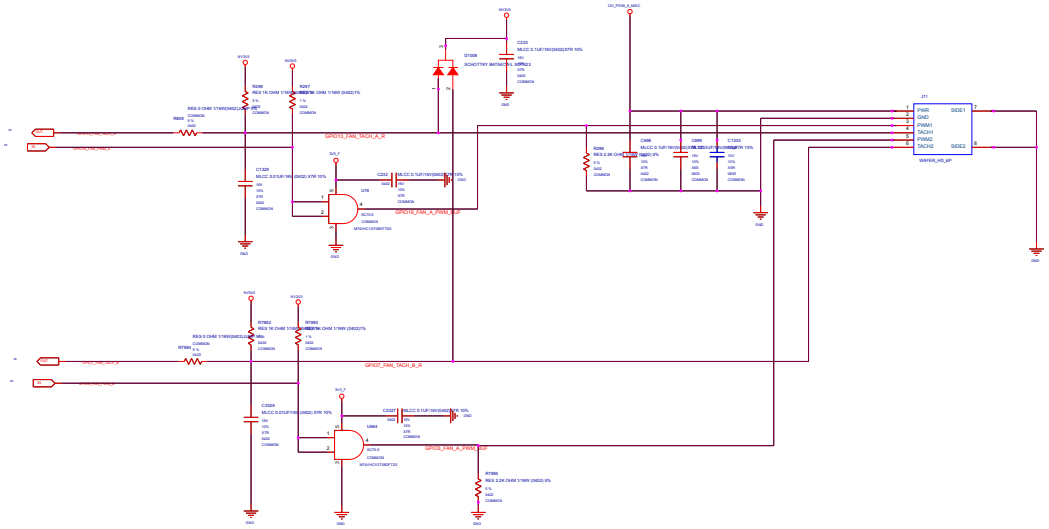

ASSEMBLY	<ASSEMBLY_DESCRIPTION>
PAGE DETAIL	FAN

ALL NVIDIA DESIGN SPECIFICATIONS, REFERENCE SPECIFICATIONS, REFERENCE BOARDS, FILES, DRAWINGS, DIAGNOSTICS, LISTS AND OTHER DOCUMENTS OR INFORMATION (TOGETHER AND SEPARATELY, "MATERIALS") ARE BEING PROVIDED "AS IS". THE MATERIALS
ALL
CONTAIN KNOWN AND UNKNOWN VIOLATIONS OR DEVIATIONS OF INDUSTRY STANDARDS AND SPECIFICATIONS. NVIDIA MAKES NO WARRANTIES, EXPRESSED, IMPLIED, STATUTORY OR OTHERWISE WITH RESPECT TO THE MATERIALS OR OTHERWISE, AND EXPRESSLY DISCLAIMS
ALL
IMPLIED WARRANTIES INCLUDING, WITHOUT LIMITATION, THE WARRANTIES OF DESIGN, OF NONINFRINGEMENT, MERCHANTABILITY OR FITNESS FOR A PARTICULAR PURPOSE, OR ARISING FROM A COURSE OF DEALING, TRADE USAGE, TRADE PRACTICE, OR INDUSTRY STANDARDS.

NVIDIA CORPORATION
2701 SAN TOMAS EXPRESSWAY
SANTA CLARA, CA 95050, USA

NV_PN	600-1G161-BASE-000		
PCB REV	PD1701-A00	PAGE	50 OF 52
BOM REV	A	DATE	21-OCT-2016

Page51: PWR SENSE

MODE PIN STATUS	MULTIPLEXER OPERATION
LOW	DEVICE A
TRI-STATE(FLOATING)	STAND-ALONE
HIGH	DEVICE B

ENABLE PIN STATUS	MULTIPLEXER OPERATION
LOW	FULLY FUNCTIONAL
TRI-STATE(FLOATING)	LIMITTED FUNCTION
HIGH	STANDBY

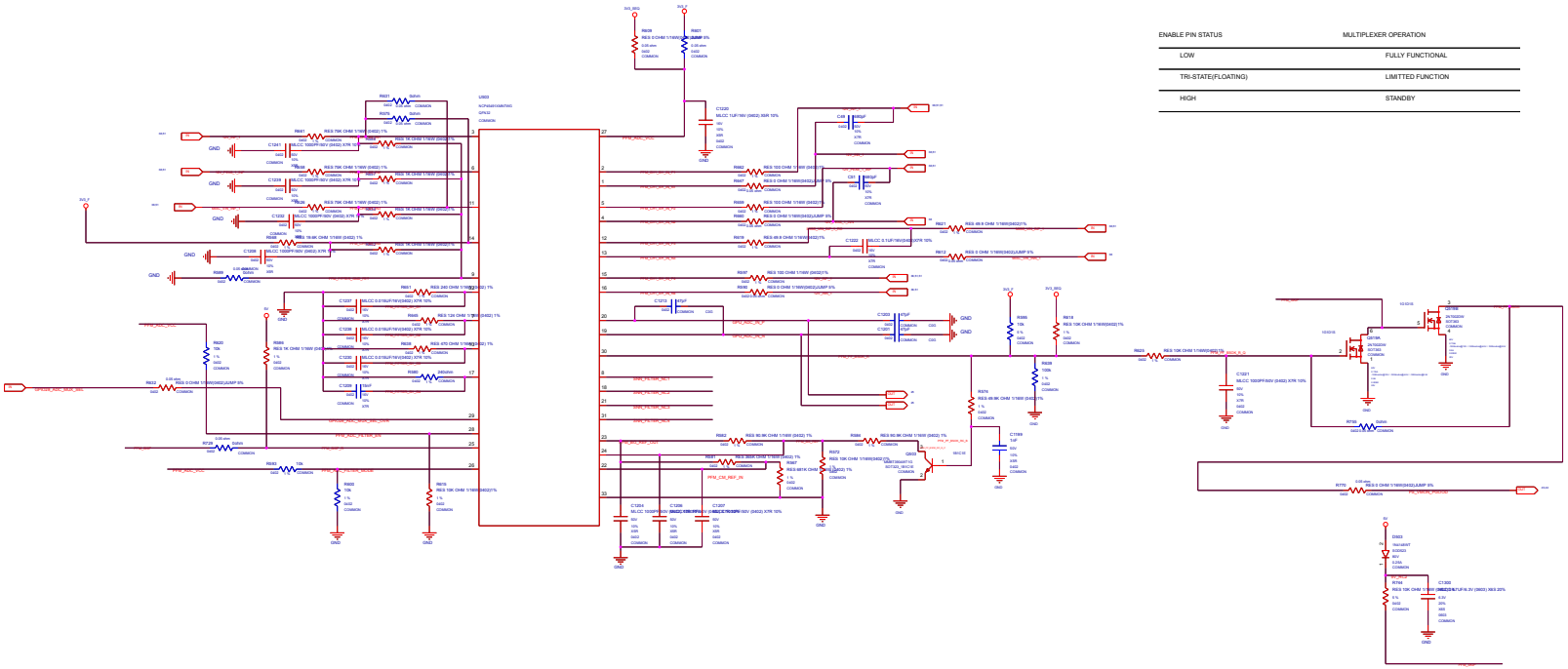

ASSEMBLY	<ASSEMBLY_DESCRIPTION>
PAGE DETAIL	PS: Pre-filter

ALL NVIDIA DESIGN SPECIFICATIONS, REFERENCE SPECIFICATIONS, REFERENCE BOARDS, FILES, DRAWINGS, DIAGNOSTICS, LISTS AND OTHER DOCUMENTS OR INFORMATION (TOGETHER AND SEPARATELY, "MATERIALS") ARE BEING PROVIDED "AS IS". THE MATERIALS MAY CONTAIN KNOWN AND UNKNOWN VIOLATIONS OR DEVIATIONS OF INDUSTRY STANDARDS AND SPECIFICATIONS. NVIDIA MAKES NO WARRANTIES, EXPRESSED, IMPLIED, STATUTORY OR OTHERWISE WITH RESPECT TO THE MATERIALS OR OTHERWISE, AND EXPRESSLY DISCLAIMS IMPLIED WARRANTIES INCLUDING, WITHOUT LIMITATION, THE WARRANTIES OF DESIGN, OF NONINFRINGEMENT, MERCHANTABILITY OR FITNESS FOR A PARTICULAR PURPOSE, OR ARISING FROM A COURSE OF DEALING, TRADE USAGE, TRADE PRACTICE, OR INDUSTRY STANDARDS.

NVIDIA CORPORATION
2701 SAN TOMAS EXPRESSWAY
SANTA CLARA, CA 95050, USA

NV_PN	600-1G161-BASE-000		
PCB REV	PG161-A00	PAGE	51 OF 53
SCM REV	A	DATE	21-OCT-2015

Page52: MECH

Bracket:

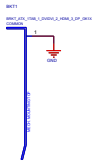

MOUNTING HOLES FOR HS:

BACK STIFFENER:

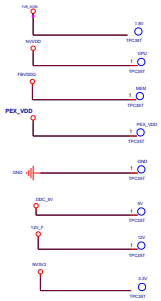

ASSEMBLY	<ASSEMBLY_DESCRIPTION>
PAGE DETAIL	MECH

ALL NVIDIA DESIGN SPECIFICATIONS, REFERENCE SPECIFICATIONS, REFERENCE BOARDS, FILES, DRAWINGS, DIAGNOSTICS, LISTS AND OTHER DOCUMENTS OR INFORMATION (TOGETHER AND SEPARATELY, "MATERIALS") ARE BEING PROVIDED "AS IS". THE MATERIALS MAY
(1) CONTAIN KNOWN AND UNKNOWN VIOLATIONS OR DEVIATIONS OF INDUSTRY STANDARDS AND SPECIFICATIONS. NVIDIA MAKES NO WARRANTIES, EXPRESSED, IMPLIED, STATUTORY OR OTHERWISE WITH RESPECT TO THE MATERIALS OR OTHERWISE, AND EXPRESSLY DISCLAIMS
ALL
IMPLIED WARRANTIES INCLUDING, WITHOUT LIMITATION, THE WARRANTIES OF DESIGN, OF NONINFRINGEMENT, MERCHANTABILITY OR FITNESS FOR A PARTICULAR PURPOSE, OR ARISING FROM A COURSE OF DEALING, TRADE USAGE, TRADE PRACTICE, OR INDUSTRY STANDARDS.

NVIDIA CORPORATION
2701 SAN TOMAS
EXPRESSWAY
SANTA CLARA, CA 95050, USA

NV_PN	600-1G161-BASE-000		
PCB REV	PCI-YET-AND	PAGE	52 OF 53
BOM REV	A	DATE	21-OCT-2015