SAMSUNG CONFIDENTIAL ANIBAL
THIS DOCUMENT CONTAINS CONFIDENTIAL
PROPRIETARY INFORMATION THAT IS
SAMSUNG ELECTRONICS CO'S PROPERTY.
DO NOT DISCLOSE TO OR DUPLICATE FOR OTHERS
EXCEPT AS AUTHORIZED BY SAMSUNG.

SM-A305F REV 03

SM-A305F/FN/GT/G/GN
Common

2019.08.10

sheet01 : GSM / WCDMA / LTE RF

sheet02 : TRANCEIVER, DRX

sheet03 : SENSORS, DMB, CONNECTIVITY

sheet04 : LASSEN O +

sheet05 : PMIC(Main,IF), KEY, MOTOR, eMMC, Fingerprint

sheet06 : AUDIO, SD/SIM, SUB FPCB CON

sheet07 : CAMERA, DISPLAY

ANIBAL GARCIA VENEZUELA

SAMSUNG CONFIDENTIAL ANIBAL
THIS DOCUMENT CONTAINS CONFIDENTIAL
PROPRIETARY INFORMATION THAT IS
SAMSUNG ELECTRONICS CO'S PROPERTY.
DO NOT DISCLOSE TO OR DUPLICATE FOR OTHERS
EXCEPT AS AUTHORIZED BY SAMSUNG.

ANIBAL GARCIA VENEZUELA

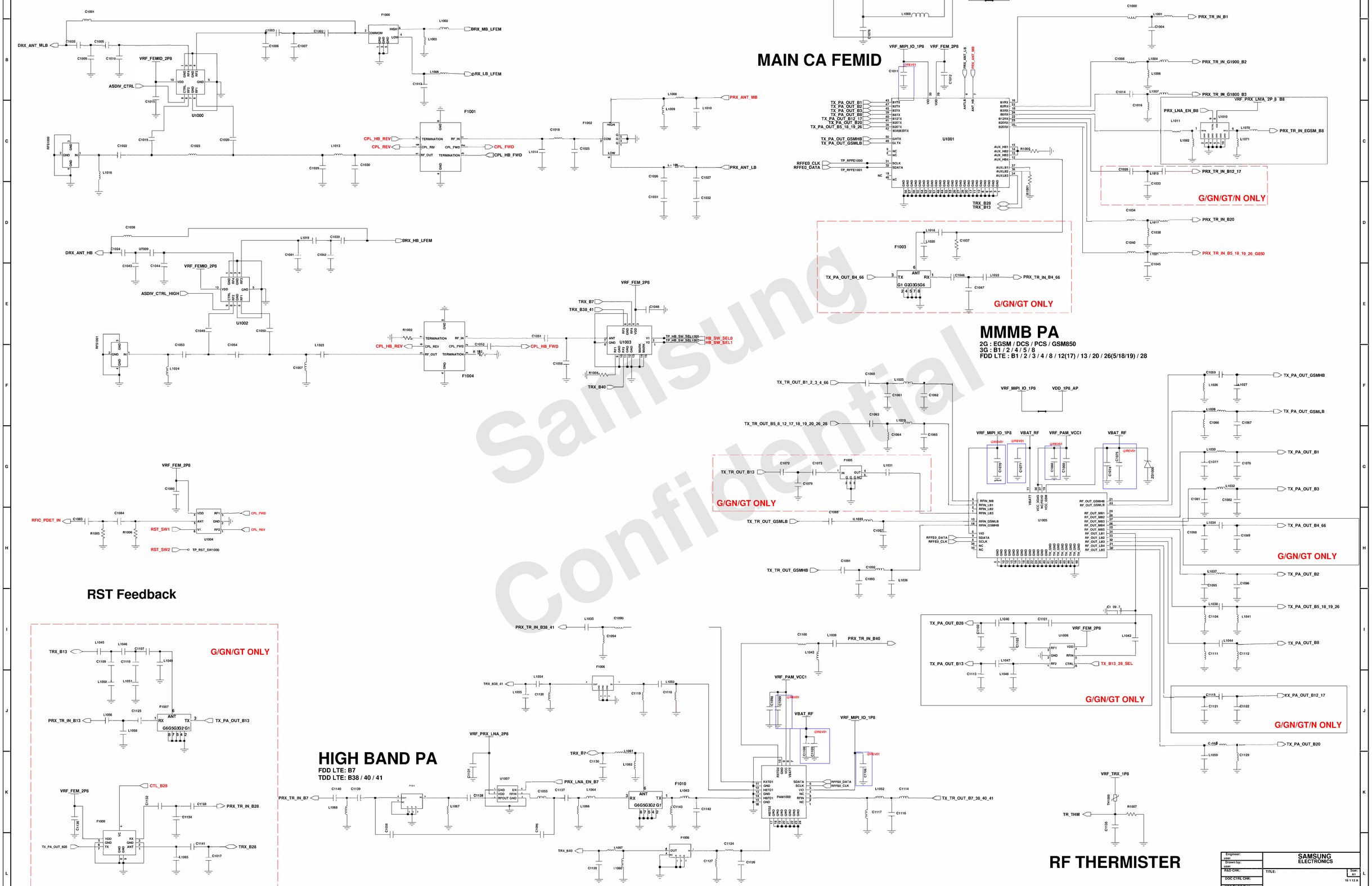

Samsung Confidential

Changed by:	Date Changed:	Time Changed:	Engineer:	SAMSUNG ELECTRONICS
user	Monday, April 23, 2018	8:49:04 pm	Drawn by: user	
			RLD CHK:	TITLE:
			DOC CTRL CHK:	Size: A1
			MFG ENGR CHK:	16 1 12 A
			QA CHK:	REV: Drawing Number: Page: 1

SAMSUNG CONFIDENTIAL ANIBAL
THIS DOCUMENT CONTAINS CONFIDENTIAL
PROPRIETARY INFORMATION THAT IS
SAMSUNG ELECTRONICS co.'S PROPERTY.
DO NOT DISCLOSE TO OR DUPLICATE FOR OTHERS
EXCEPT AS AUTHORIZED BY SAMSUNG.

ANIBAL GARCIA VENEZUELA

DRX

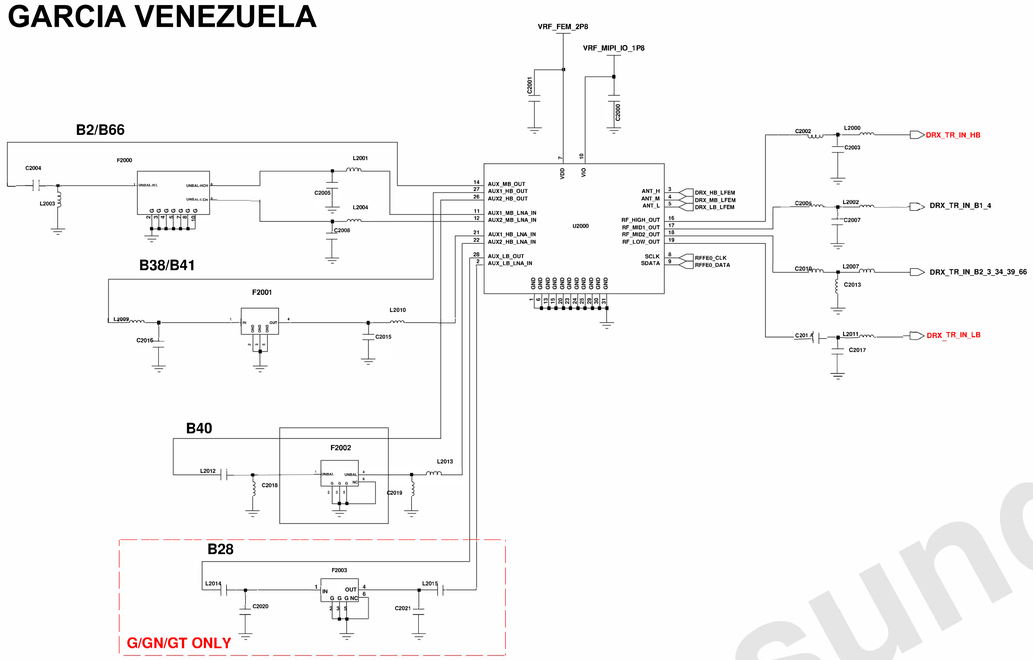

APT MODULATOR

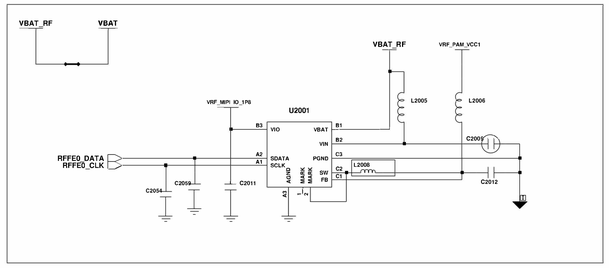

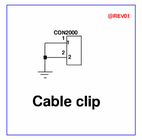

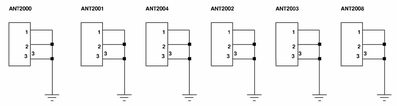

GND

TRANCEIVER

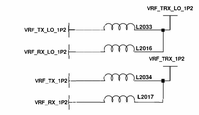

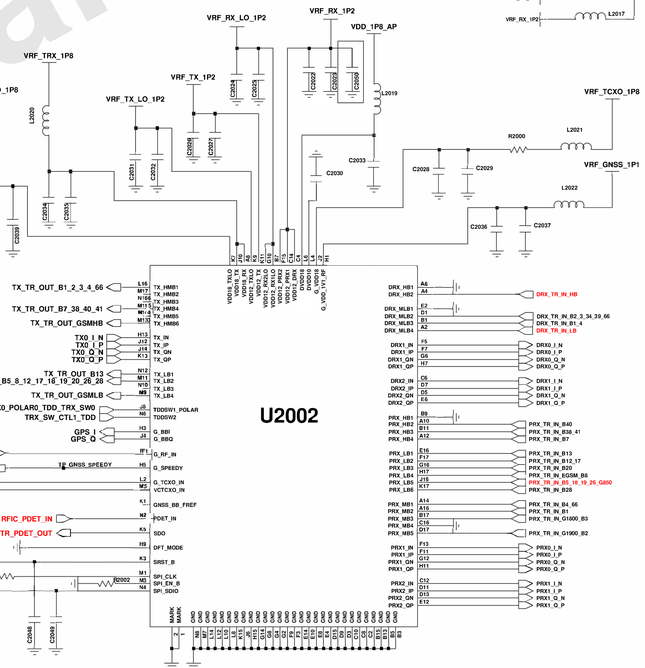

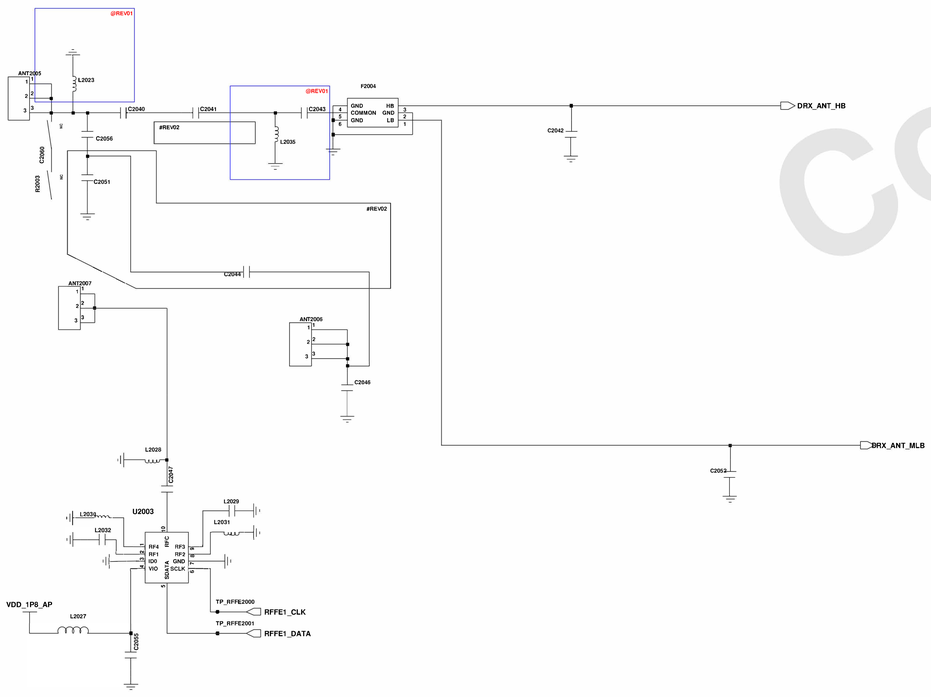

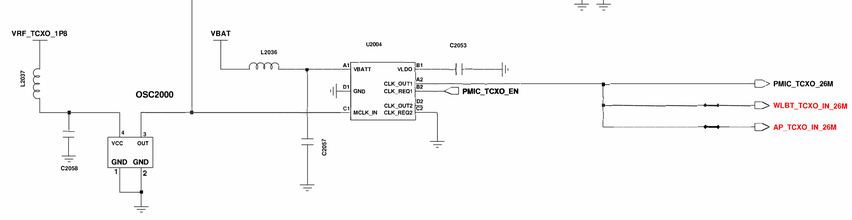

Engineer	DRX, TRANCEIVER
Drawn by:	
R&D CHK:	TITLE: SM-J737P/V/R4 — Size: A3
DOC CTRL CHK:	
MFG ENGR CHK:	
QA CHK:	Drawing Number: 2/7

Changed by:	Date Changed:	Time Changed:

Samsung Confidential

SAMSUNG CONFIDENTIAL ANIBAL
THIS DOCUMENT CONTAINS CONFIDENTIAL
PROPRIETARY INFORMATION THAT IS
SAMSUNG ELECTRONICS CO'S PROPERTY.
DO NOT DISCLOSE DO OR DUPLICATE FOR OTHERS
EXCEPT AS AUTHORIZED BY SAMSUNG.

ANIBAL GARCIA VENEZUELA

BT/WIFI

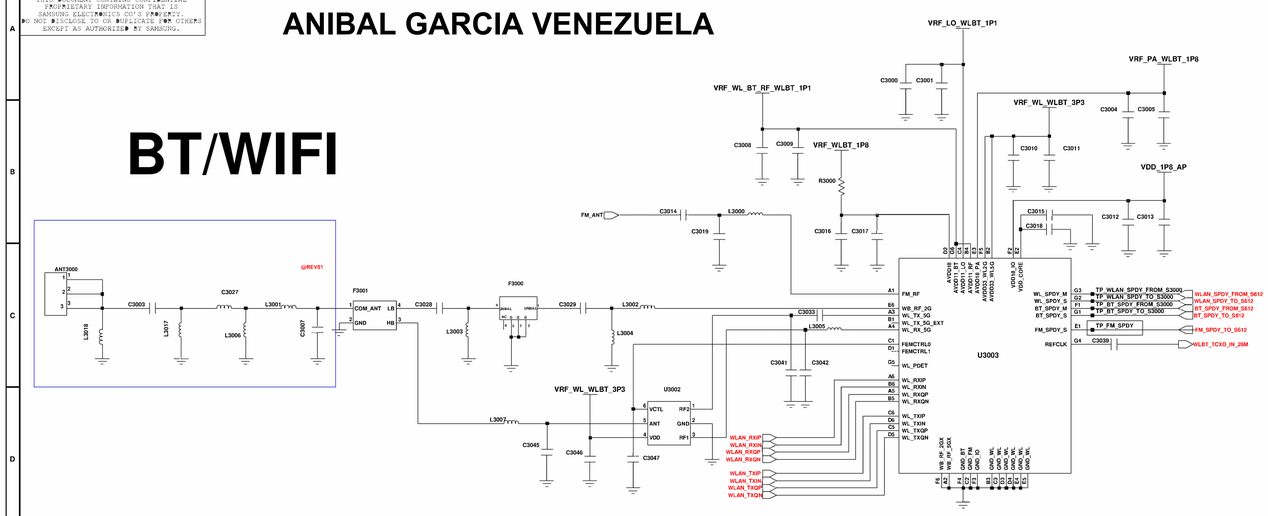

GPS

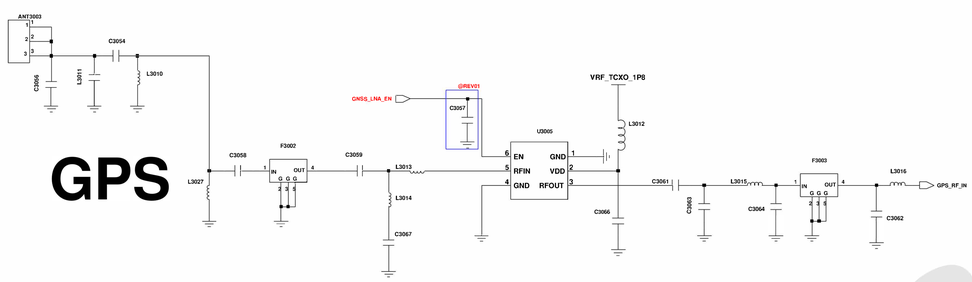

NFC

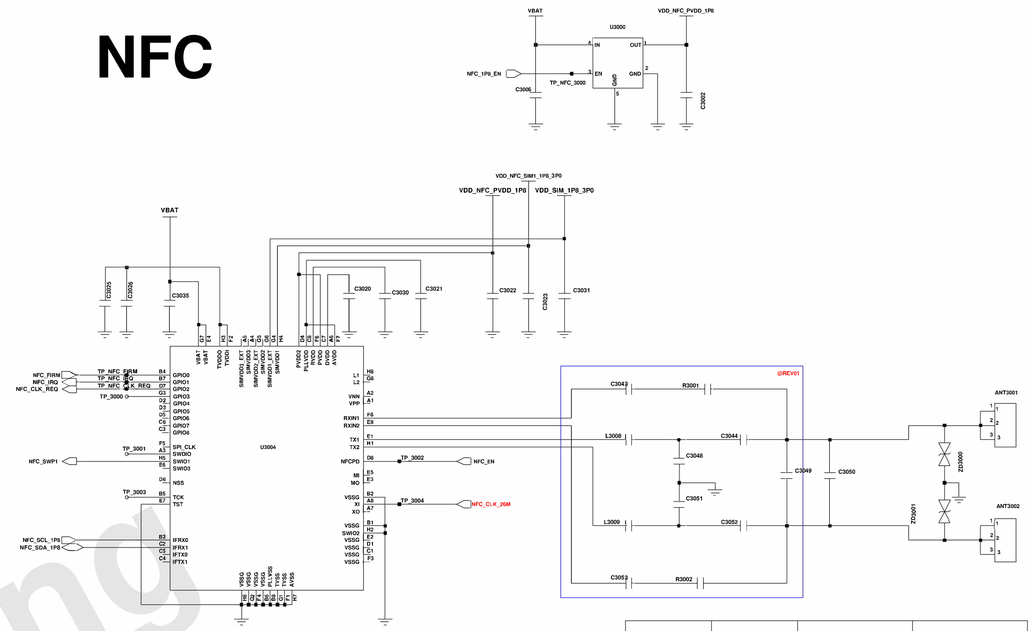

NFC	NFC PART	Power supply of SIM1		NFC GPIO 14	
	U3004	R6001	R6002	R4012	R4013
NFC	CONNECT	short	open	10K ohm	open
nonNFC	NC	open	short	open	10K ohm

DMB
(for KOR)

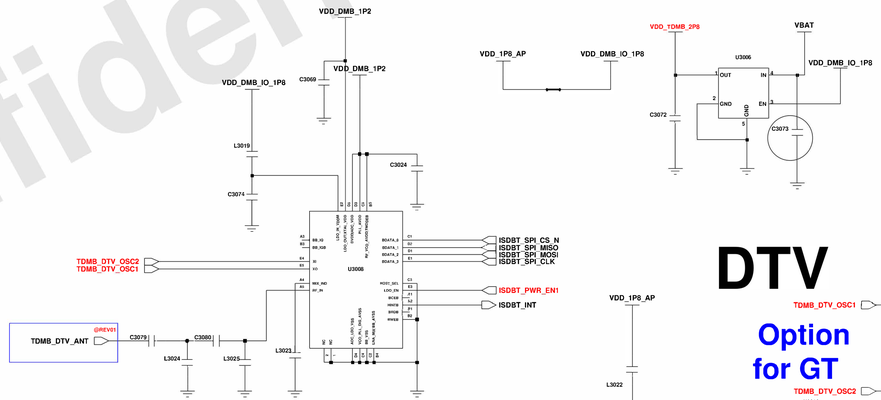

FM/TDMB diplexer
Remove

SENSORS

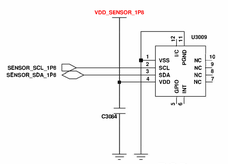

RGB sensor

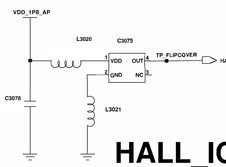

HALL_IC

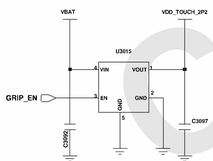

Grip Sensor

DTV
Option for GT

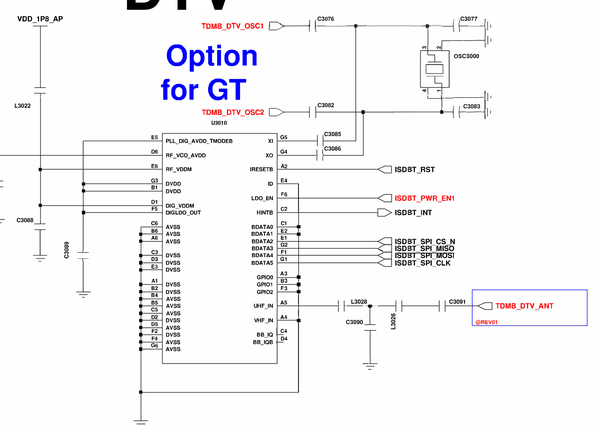

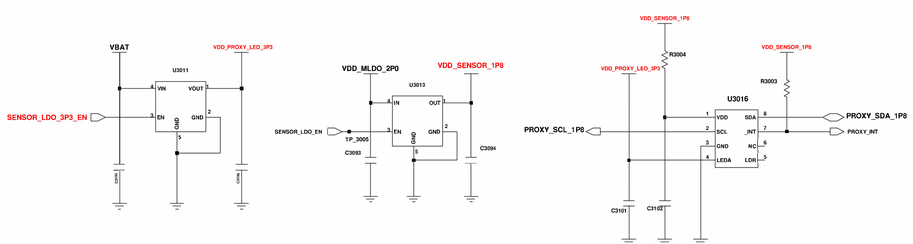

SENSOR LDO

Proxi Sensor

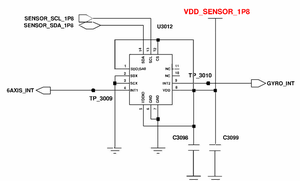

6 AXIS(ACC+GRYO)

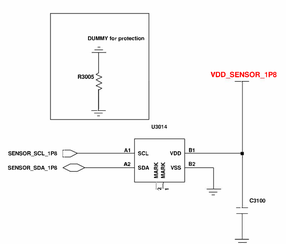

MAGNETIC

Samsung Confidential

Engineer:	SENSOR, WIFI/BT/GPS/NFC
Drawn by:	
R&D CHK:	TITLE: SM-J737P/V/R4
DOC CTRL CHK:	Size: A1
MFG ENGR CHK:	
QA CHK:	REV: Drawing Number: Page: 3-7

Changed by: user93 | Date Changed: | Time Changed:

SAMSUNG CONFIDENTIAL ANIBAL
THIS DOCUMENT CONTAINS CONFIDENTIAL
PROPRIETARY INFORMATION THAT IS
SAMSUNG ELECTRONICS CO. LTD PROPRIETARY.
DO NOT REPRODUCE OR DISCLOSE THIS TO THIRD
PARTY WITHOUT WRITTEN PERMISSION.

ANIBAL GARCIA VENEZUELA

EXYNOS7904 (Lassen-O Plus)

POP LP4 4G : SEC

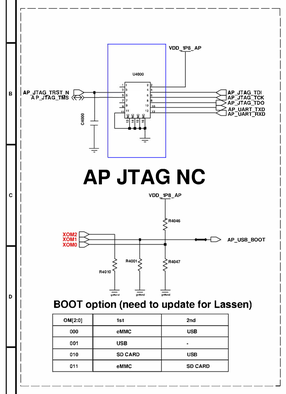

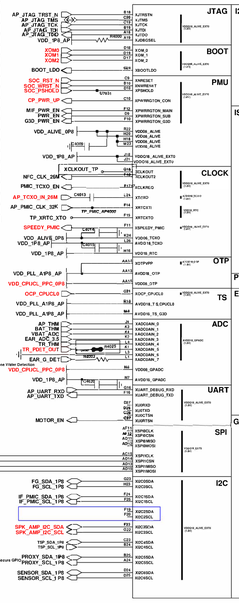

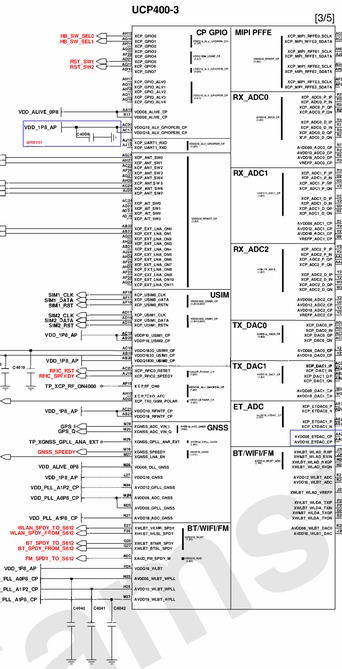

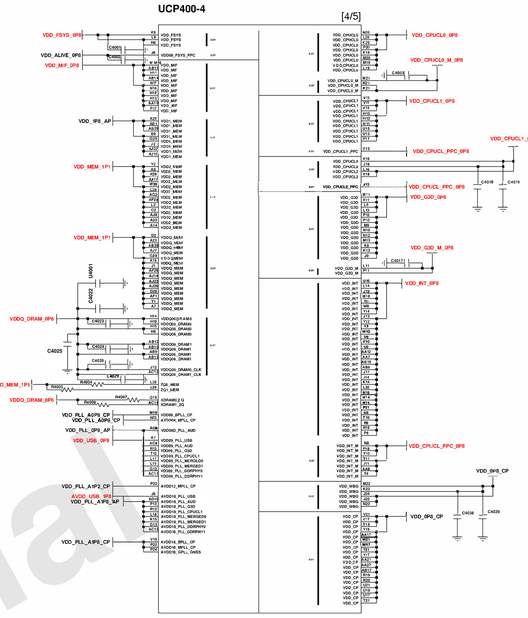

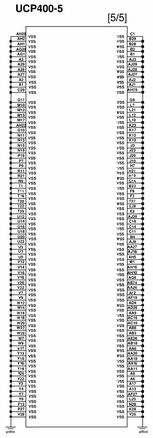

XGPIO_14	
H	NFC_USE
L	NFC_UNUSE

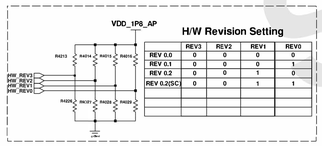

	REV3	REV2	REV1	REV0
REV 0.0	0	0	0	0
REV 0.1	0	0	0	1
REV 0.2	0	0	1	0
REV 0.2(SC)	0	0	1	1

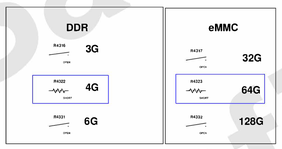

I2C Pull-up Register

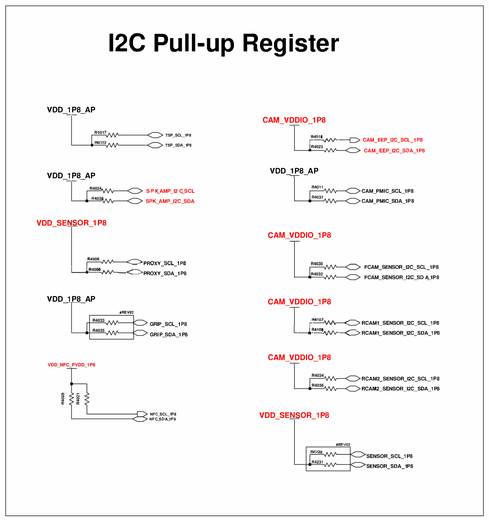

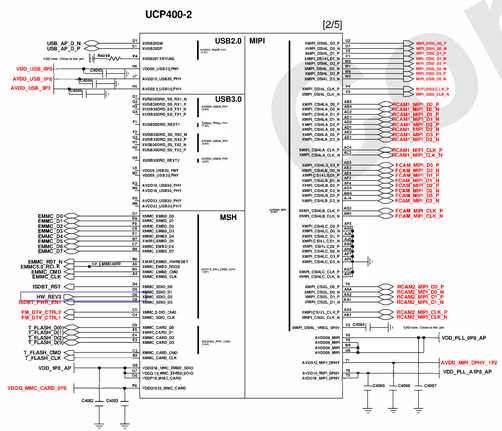

AP Decap

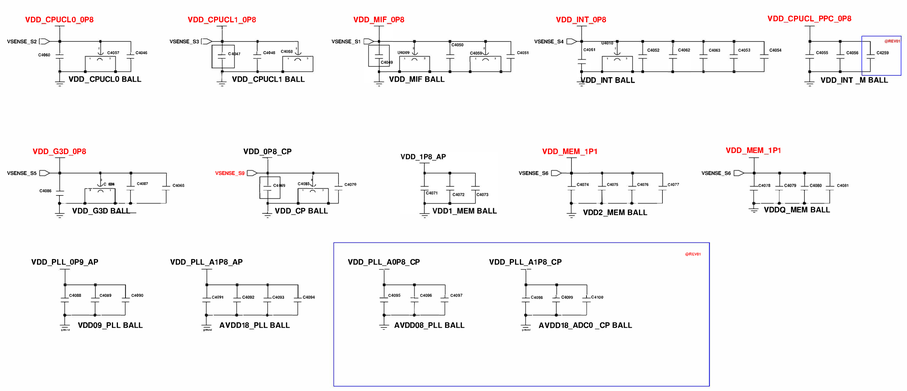

PCB JTAG

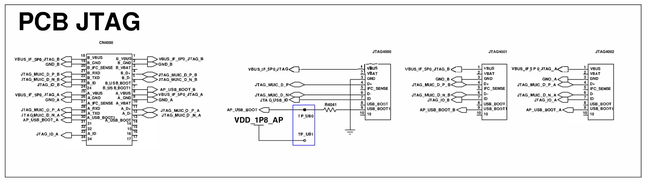

Engineer:	AP		
Drawn by:			
R&D Cntr:	TITLE: 2019_J9	Size: A4	
PDE CTRL Cntr:			
M.O.S Mod Cntr:			
QA CDE:	REV:	Drawing Number:	Page: 1-1

Changed by:	Date Changed:	Time Changed:

Samsung Confidential

SAMSUNG CONFIDENTIAL ANIBAL
- THIS DOCUMENT CONTAINS CONFIDENTIAL
INFORMATION INFORMATION THAT IS
SAMSUNG ELECTRONICS CO., REPORTS.

MAIN_PMIC

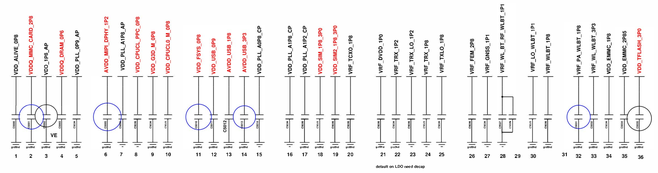

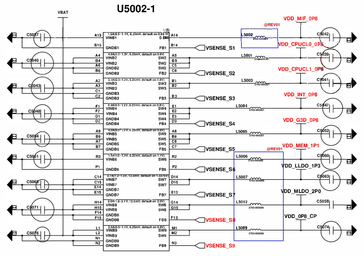

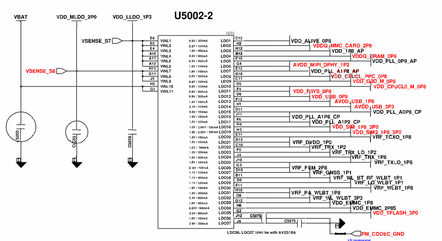

ANIBAL GARCIA VENEZUELA

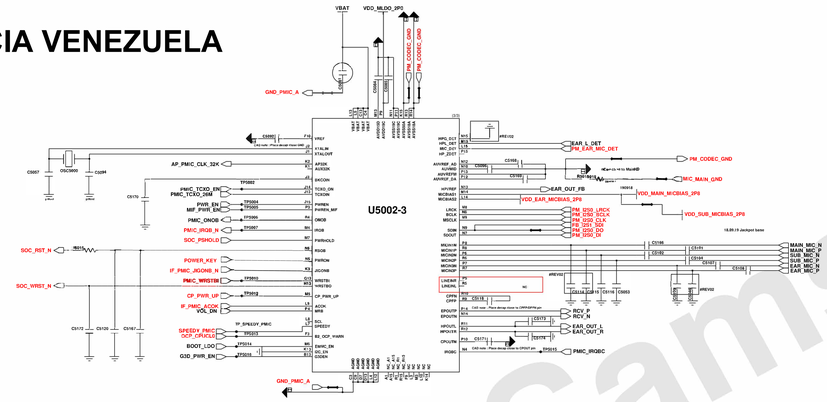

IF_PMIC

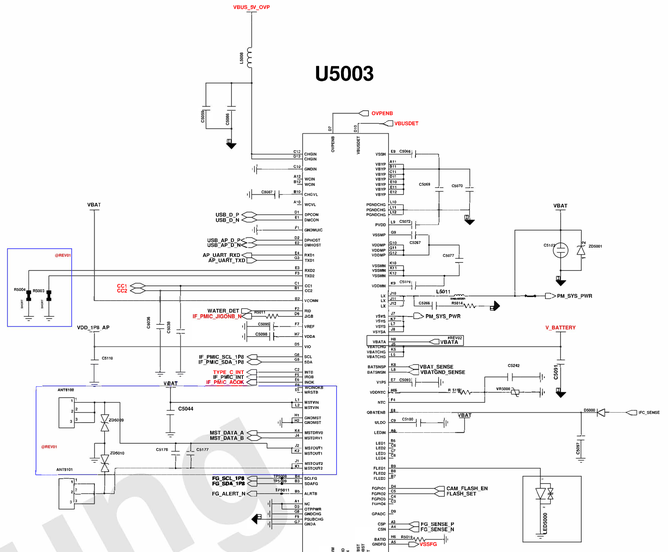

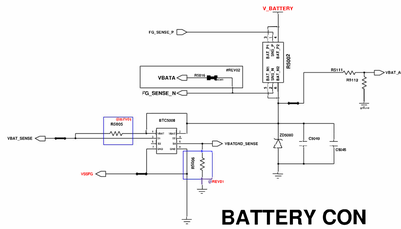

BATTERY CON

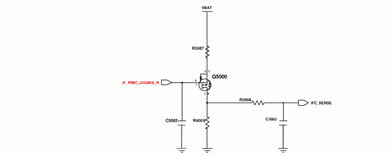

IF PMIC(S2MU106)

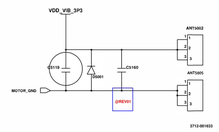

MOTOR

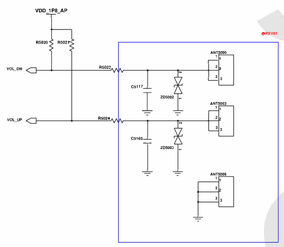

VOLUME KEY

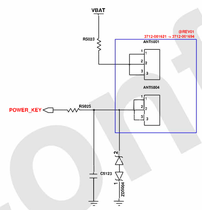

POWER KEY

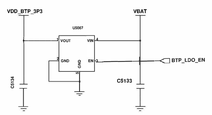

FPS PWR

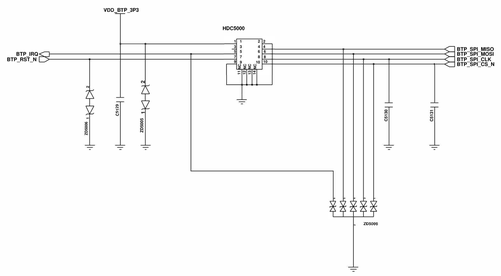

Finger Print Sensor

64GB eMMC 5.1

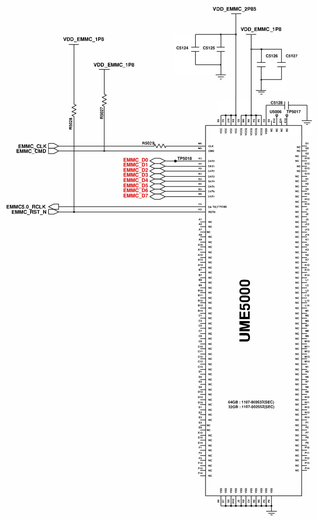

Engineer:	PMIC/IF PMIC/eMMC
Drawn by:	
R&D DNI:	
EDC CHL DNI:	TITLE: 2019_J9
MFG ENGR DNI:	
QA DNI:	REV: Drawing Number: Page:1-1

Changed By: | Date Changed: | Time Changed:

Samsung Confidential

SAMSUNG CONFIDENTIAL AND PROPRIETARY
THIS DOCUMENT CONTAINS CONFIDENTIAL AND PROPRIETARY INFORMATION THAT IS SAMSUNG ELECTRONICS CO'S PROPERTY. DO NOT DISCLOSE TO NON-EMPLOYEES OR OTHERS EXCEPT AS AUTHORIZED BY SAMSUNG.

AUDIO

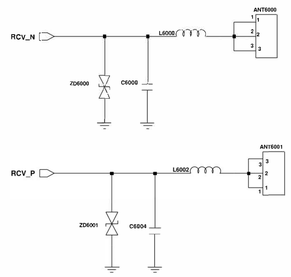

RCV CONTACT

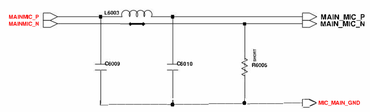

NEAR TO CODEC GND_ISOLATION

MAIN MIC

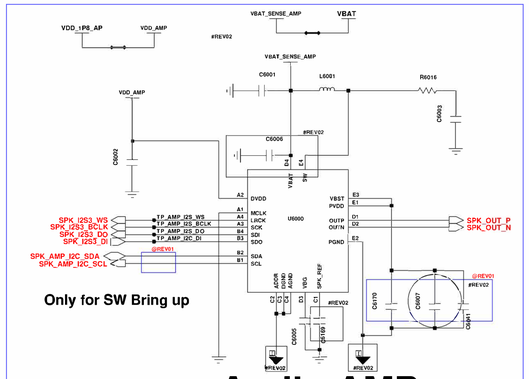

Audio AMP

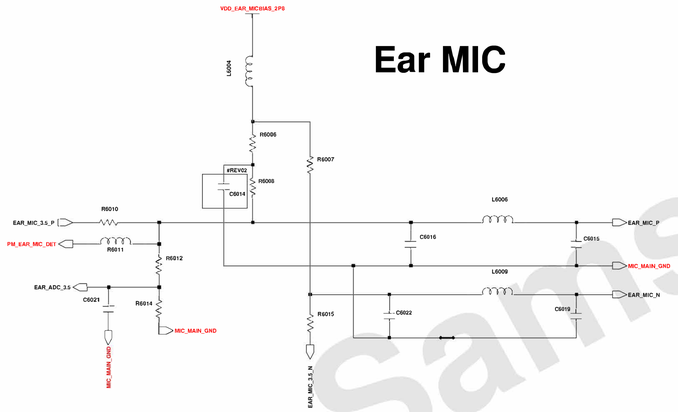

Ear MIC

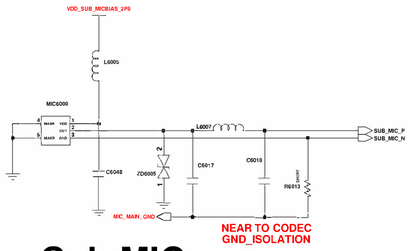

NEAR TO CODEC GND_ISOLATION

Sub MIC

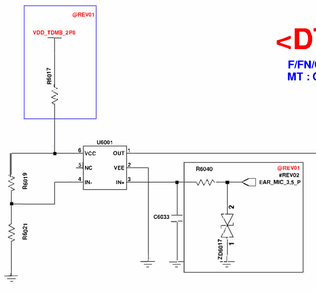

<DTV>
F/FN/G: NC
MT : ONLY

DTV DETECT OPEN

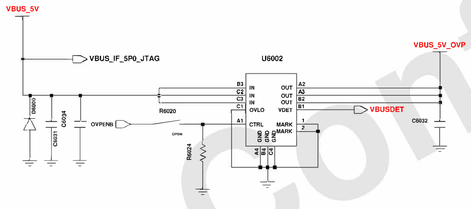

MAIN FPCB

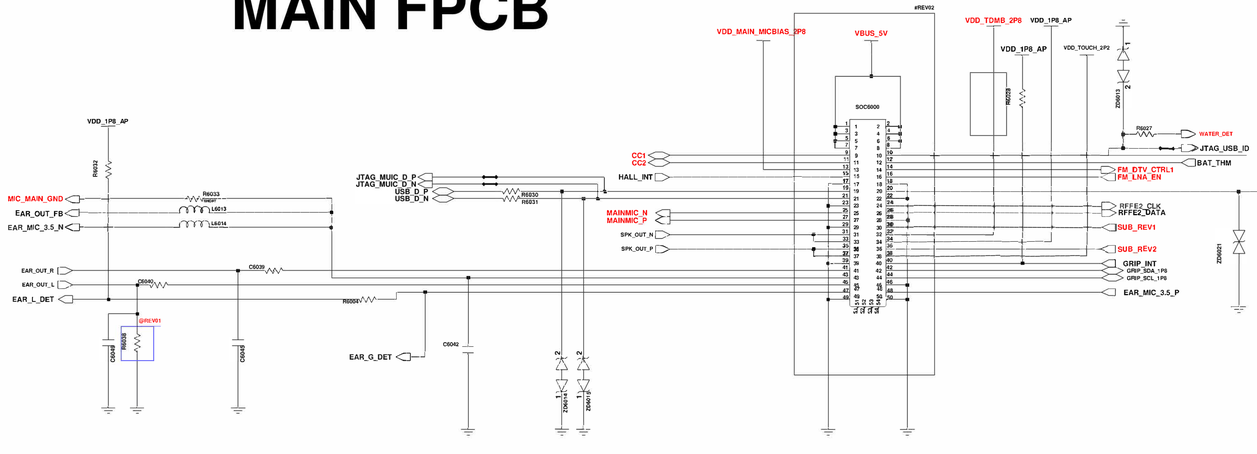

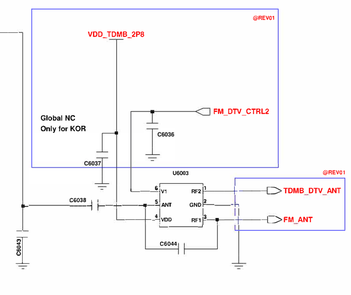

SIM & SD CARD (3IN3)

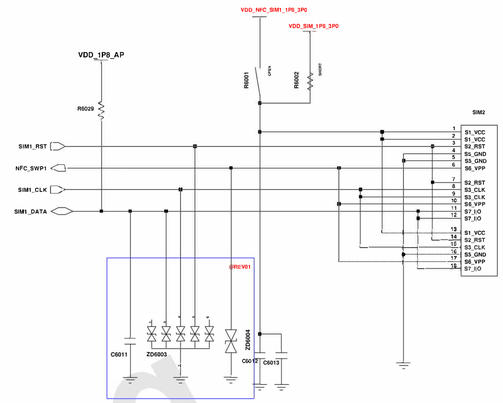

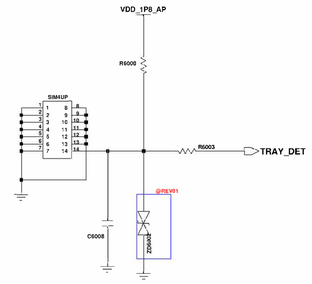

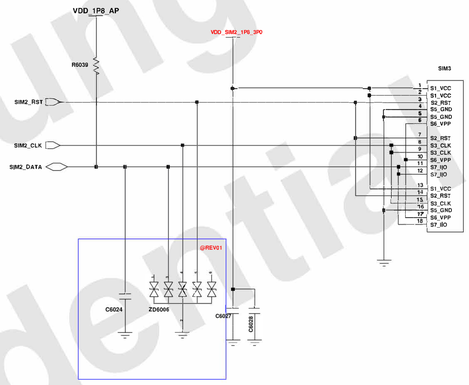

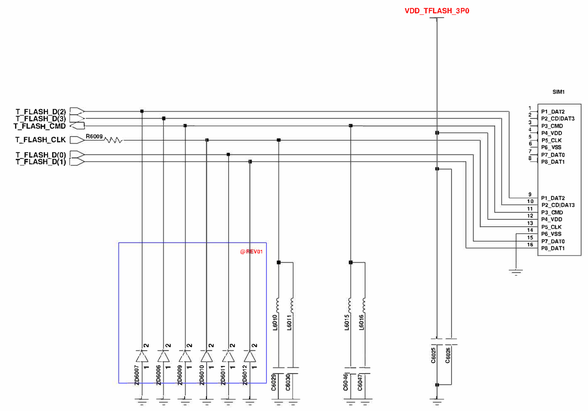

ANIBAL GARCIA VENEZUELA

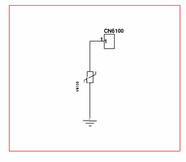

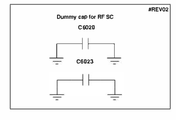

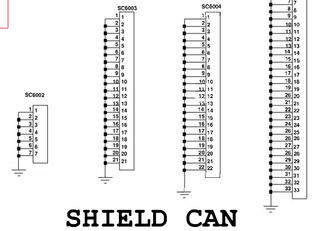

SHIELD CAN

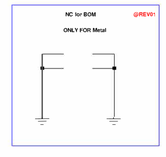

BOSS HOLE

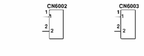

2D BARCODE

F(Global) R6034
G(LA) R6035
GT(LA DTV) R6036
N(KOR/NFC) R6023
ETC1 R6037

	F (Global)	G (LA)	N (KOR)	FN	GN	GT	ETC1	
R6034	O			O				
R6035		O			O			
R6023			O	O	O			
R6036						O		
R6037								

Engineer:	AUDIO, SIM/SD, SHIELD CAN
Drawn by:	
R&D CHK:	TITLE:
DOC CTRL CHK:	
MFG ENGR CHK:	

Changed by: | Date Changed: | Time Changed: | QA CHK: | REV | Drawing Number: | Size: A1 | Page: 6/7

Samsung Confidential

SAMSUNG CONFIDENTIAL ANIBAL
THIS DOCUMENT CONTAINS CONFIDENTIAL
PROPRIETARY INFORMATION THAT IS
SAMSUNG ELECTRONICS CO'S PROPERTY.
DO NOT DISCLOSE TO OR DUPLICATE FOR OTHERS
EXCEPT AS AUTHORIZED BY SAMSUNG.

CAMERA_PART

ANIBAL GARCIA VENEZUELA

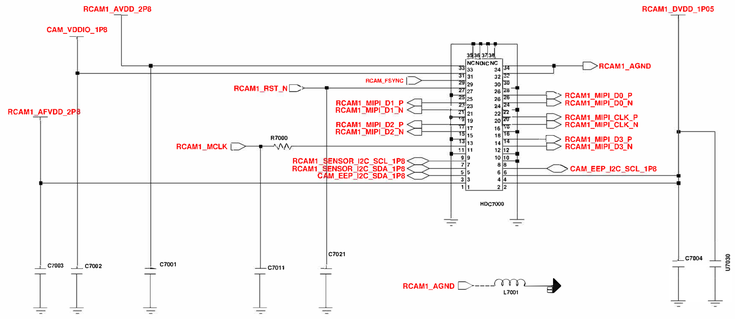

RCAM1_16M CAMERA(34PIN)

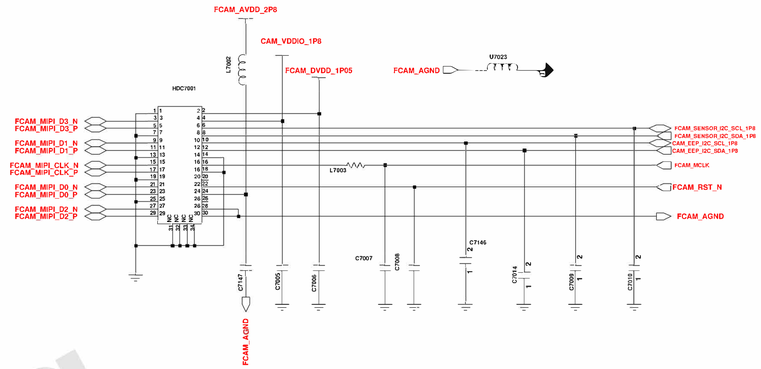

FRONT_16M CAMERA(30PIN)

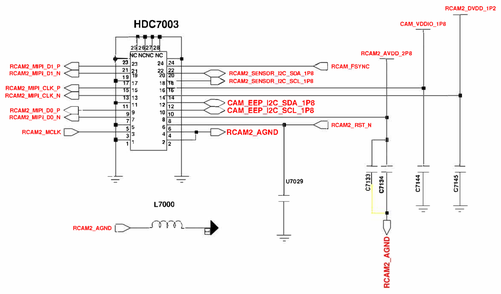

RCAM2_5M CAMERA(24PIN)_S5K5E9

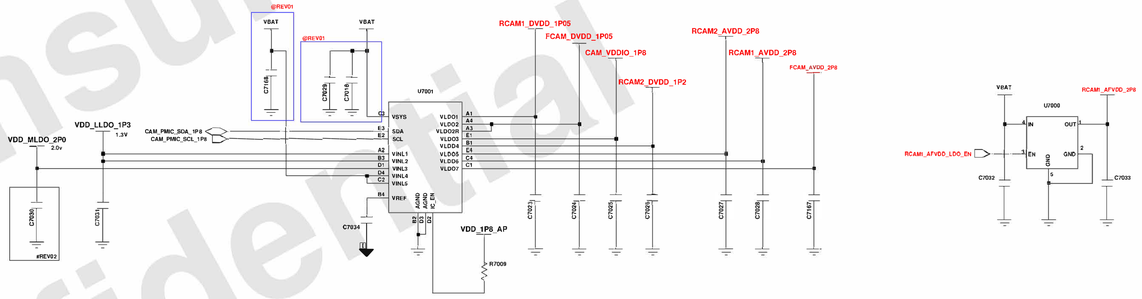

CAM PMIC

OCTA LDO

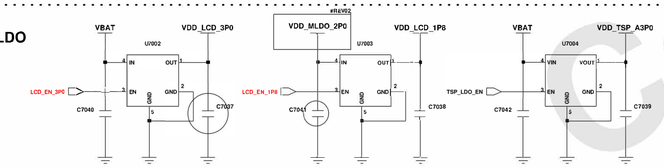

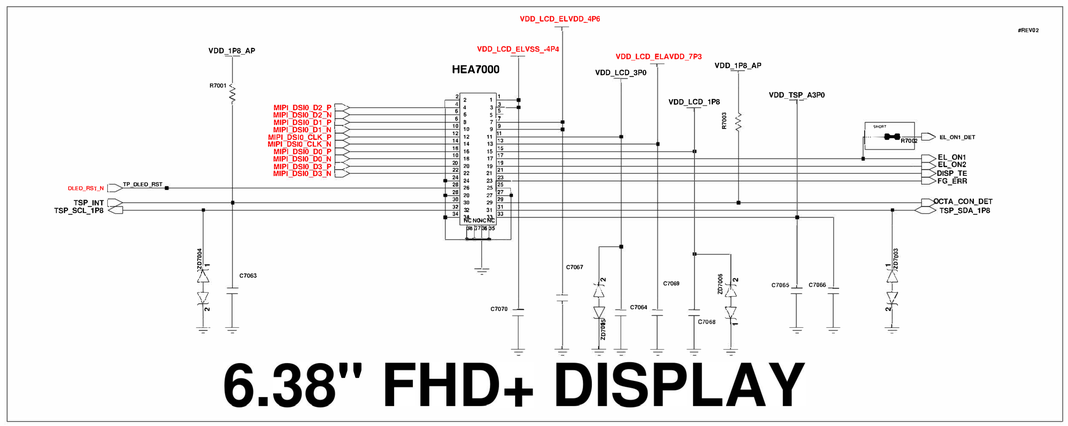

6.38" FHD+ DISPLAY

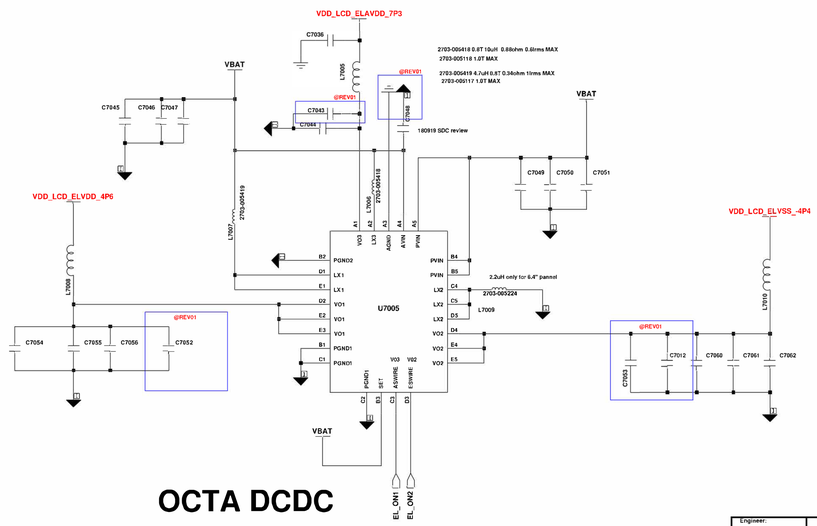

OCTA DCDC

Engineer:	CAMERA, DISPLAY
Drawn by:	
R&D CHK:	TITLE: 2019_J9
DOC CTRL CHK:	Size: A1
MFG ENGR CHK:	
QA CHK:	REV / Drawing Number: / Page: 7/7

Changed by: | Date Changed: | Time Changed:

Samsung Confidential