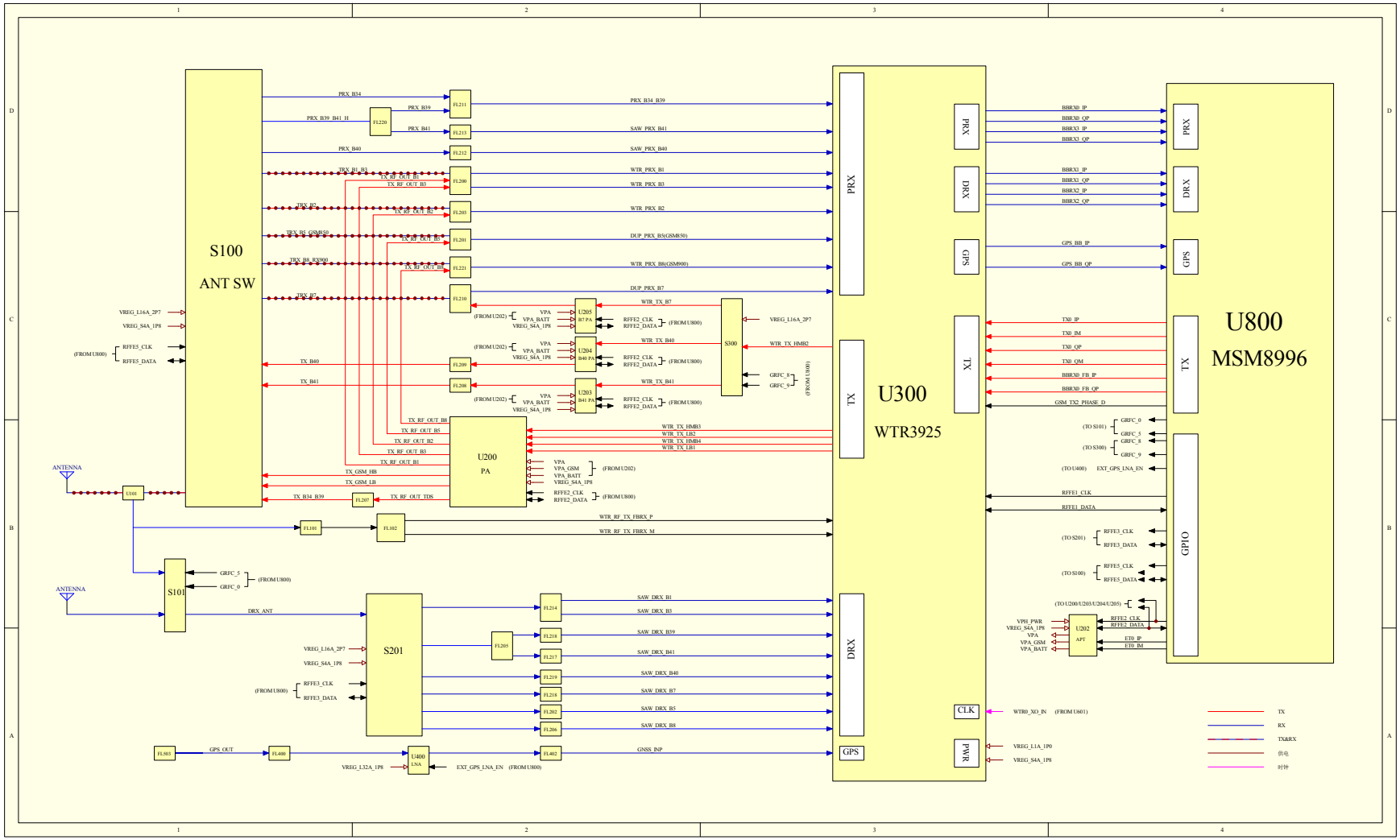
S100
ANT SW
U300
WTR3925
U800
MSM8996
U200
PA
S201
S101
S300
U400
LNA
U101
U202
APT
U205
B7 PA
U204
B40 PA
U203
B41 PA
PRX
DRX
GPS
TX
CLK
PWR
GPIO
ANTENNA
PRX_B34
PRX_B39
PRX_B39_B41_H
PRX_B41
PRX_B40
PRX_B1_B3
TX_RF_OUT_B1
TX_RF_OUT_B3
PRX_B2
TX_RF_OUT_B2
PRX_B5_GSM850
TX_RF_OUT_B5
PRX_B8_RX900
TX_RF_OUT_B8
PRX_B7
VREG_L16A_2P7
VREG_S4A_1P8
(FROM U800)
RFFE5_CLK
RFFE5_DATA
TX_B40
TX_B41
TX_RF_OUT_B8
TX_RF_OUT_B5
TX_RF_OUT_B2
TX_RF_OUT_B3
TX_RF_OUT_B1
TX_GSM_HB
TX_GSM_LB
TX_B34_B39
TX_RF_OUT_TDS
GRFC_5
GRFC_0
DRX_ANT
VREG_L16A_2P7
VREG_S4A_1P8
(FROM U800)
RFFE3_CLK
RFFE3_DATA
GPS_OUT
VREG_L32A_1P8
EXT_GPS_LNA_EN (FROM U800)
PRX_B34_B39
SAW_PRX_B41
SAW_PRX_B40
WTR_PRX_B1
WTR_PRX_B3
WTR_PRX_B2
DUP_PRX_B5(GSM850)
WTR_PRX_B8(GSM900)
DUP_PRX_B7
WTR_TX_B7
WTR_TX_B40
WTR_TX_B41
VPA
VPA_BATT
VREG_S4A_1P8
(FROM U202)
RFFE2_CLK
RFFE2_DATA
(FROM U800)
VREG_L16A_2P7
WTR_TX_HMB2
GRFC_8
GRFC_9
(FROM U300)
WTR_TX_HMB3
WTR_TX_LB2
WTR_TX_HMB4
WTR_TX_LB1
VPA
VPA_GSM
VPA_BATT
VREG_S4A_1P8
(FROM U202)
RFFE2_CLK
RFFE2_DATA
(FROM U800)
WTR_RF_TX_FBRX_P
WTR_RF_TX_FBRX_M
SAW_DRX_B1
SAW_DRX_B3
SAW_DRX_B39
SAW_DRX_B41
SAW_DRX_B40
SAW_DRX_B7
SAW_DRX_B5
SAW_DRX_B8
GNSS_INP
BBRX0_IP
BBRX0_QP
BBRX3_IP
BBRX3_QP
BBRX1_IP
BBRX1_QP
BBRX2_IP
BBRX2_QP
GPS_BB_IP
GPS_BB_QP
TX0_IP
TX0_IM
TX0_QP
TX0_QM
BBRX0_FB_IP
BBRX0_FB_QP
GSM_TX2_PHASE_D
(TO S101)
GRFC_0
GRFC_5
(TO S300)
GRFC_8
GRFC_9
(TO U400)
EXT_GPS_LNA_EN
RFFE1_CLK
RFFE1_DATA
(TO S201)
RFFE3_CLK
RFFE3_DATA
(TO S100)
RFFE5_CLK
RFFE5_DATA
(TO U200/U203/U204/U205)
RFFE2_CLK
RFFE2_DATA
VPH_PWR
VREG_S4A_1P8
VPA
VPA_GSM
VPA_BATT
ET0_IP
ET0_IM
WTR0_XO_IN (FROM U601)
VREG_L1A_1P0
VREG_S4A_1P8
TX
RX
TX&RX
供电
时钟

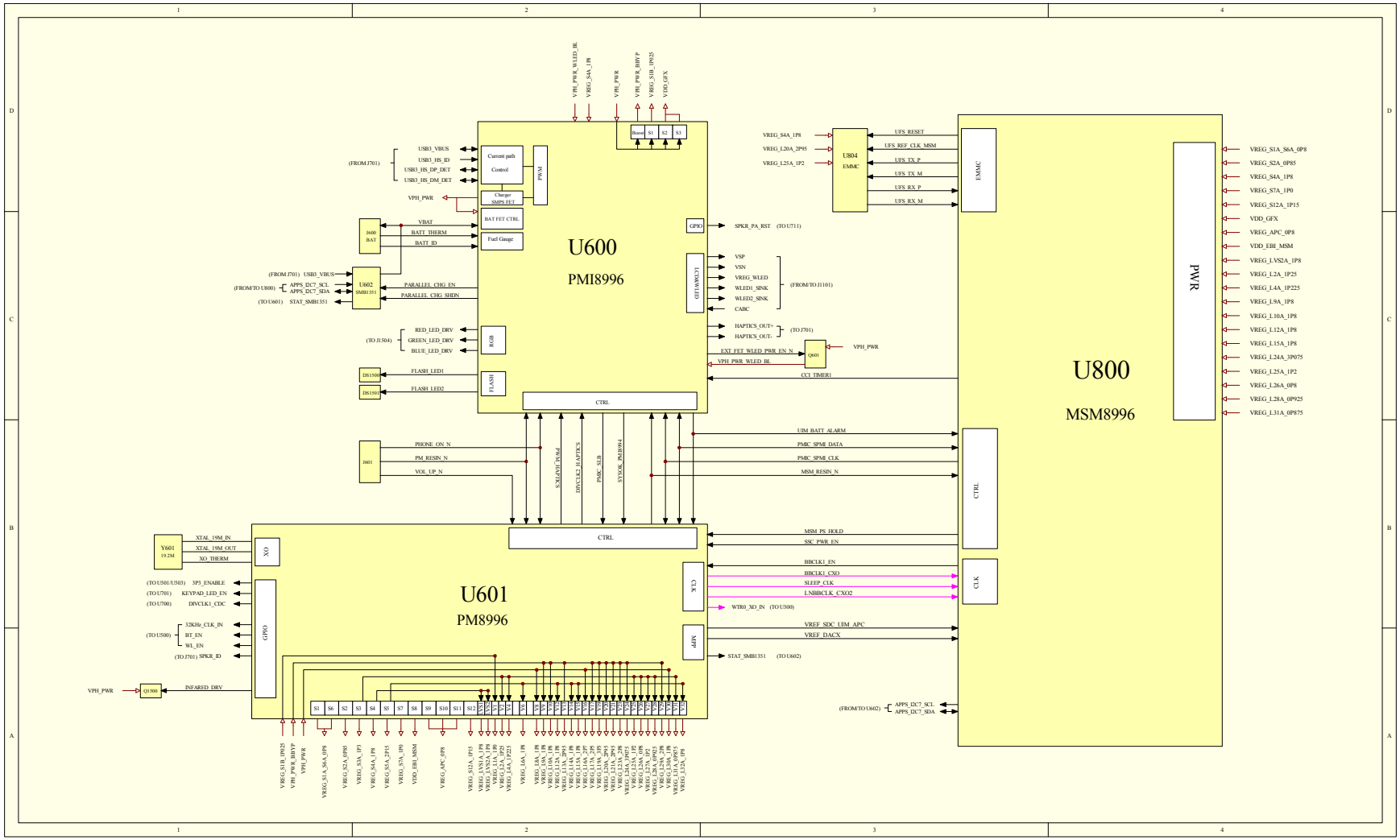
U600
PMI8996
U601
PM8996
U800
MSM8996
U804
EMMC
J600
BAT
U602
SMB1351
J601
Y601
19.2M
Q1500
Q601
DS1500
DS1501
Current path
Control
Charger
SMPS FET
BAT FET CTRL
Fuel Gauge
PWM
Boost
S1
S2
S3
RGB
FLASH
GPIO
GEFI(WICC)
CTRL
XO
CLK
ADC
EMMC
PWR
VPH_PWR_WLED_BL
VREG_S4A_1P8
VPH_PWR
VPH_PWR_BBVP
VREG_S1B_0P925
VDD_GFX
USB3_VBUS
USB3_HS_ID
USB3_HS_DP_DET
USB3_HS_DM_DET
(FROM J701)
VPH_PWR
VBAT
BATT_THERM
BATT_ID
(FROM J701) USB3_VBUS
(FROM/TO U800) APPS_I2C7_SCL
APPS_I2C7_SDA
(TO U601) STAT_SMBI1351
PARALLEL_CHG_EN
PARALLEL_CHG_SHDN
(TO J1504)
RED_LED_DRV
GREEN_LED_DRV
BLUE_LED_DRV
FLASH_LED1
FLASH_LED2
PHONE_ON_N
PM_RESIN_N
VOL_UP_N
SCALPVIT_PON4
DIVCLK2 HAPTICS
PMIC_S1B
SYSOK_PG1B904
XTAL_19M_IN
XTAL_19M_OUT
XO_THERM
(TO U501/U503) 3P3_ENABLE
(TO U701) KEYPAD_LED_EN
(TO U700) DIVCLK1_CDC
(TO U500)
32KHz_CLK_IN
BT_EN
WL_EN
(TO J701) SPKR_ID
INFARED_DRV
VREG_S1B_0P925
VPH_PWR_BBVP
VPH_PWR
VREG_S1A_S6A_0P8
VREG_S2A_0P85
VREG_S3A_1P3
VREG_S4A_1P8
VREG_S5A_2P15
VREG_S7A_1P0
VDD_EBI_MSM
VREG_APC_0P8
VREG_S12A_1P15
VREG_VS2A_1P8
VREG_LVS2A_1P8
VREG_L1A_1P0
VREG_L2A_1P25
VREG_L4A_1P225
VREG_L6A_1P8
VREG_L8A_1P8
VREG_L9A_1P8
VREG_L10A_1P8
VREG_L12A_1P8
VREG_L15A_1P8
VREG_L16A_2P7
VREG_L17A_3P075
VREG_L18A_3P075
VREG_L19A_3P3
VREG_L21A_2P85
VREG_L22A_2P85
VREG_L23A_2P85
VREG_L24A_3P075
VREG_L25A_1P2
VREG_L26A_0P8
VREG_L28A_0P925
VREG_L29A_2P05
VREG_L30A_1P8
VREG_L31A_0P875
VREG_L32A_0P8
VREG_S4A_1P8
VREG_L20A_2P95
VREG_L25A_1P2
UFS_RESET
UFS_REF_CLK_MSM
UFS_TX_P
UFS_TX_M
UFS_RX_P
UFS_RX_M
SPKR_PA_RST (TO U711)
VSP
VSN
VREG_WLED
WLED1_SINK
WLED2_SINK
CABC
(FROM/TO J1101)
HAPTICS_OUT+
HAPTICS_OUT-
(TO J701)
EXT_FET_WLED_PWR_EN_N
VPH_PWR_WLED_BL
CC1_TIMER1
UIM_BATT_ALARM
PMIC_SPMI_DATA
PMIC_SPMI_CLK
MSM_RESIN_N
MSM_PS_HOLD
SSC_PWR_EN
BBCLK1_EN
BBCLK1_CXO
SLEEP_CLK
LNBBCLK_CXO2
WTR0_XO_IN (TO U300)
VREF_SDC_UIM_APC
VREF_DACX
STAT_SMBI1351 (TO U602)
(FROM/TO U602) APPS_I2C7_SCL
APPS_I2C7_SDA
VREG_S1A_S6A_0P8
VREG_S2A_0P85
VREG_S4A_1P8
VREG_S7A_1P0
VREG_S12A_1P15
VDD_GFX
VREG_APC_0P8
VDD_EBI_MSM
VREG_LVS2A_1P8
VREG_L2A_1P25
VREG_L4A_1P225
VREG_L9A_1P8
VREG_L10A_1P8
VREG_L12A_1P8
VREG_L15A_1P8
VREG_L24A_3P075
VREG_L25A_1P2
VREG_L26A_0P8
VREG_L28A_0P925
VREG_L31A_0P875

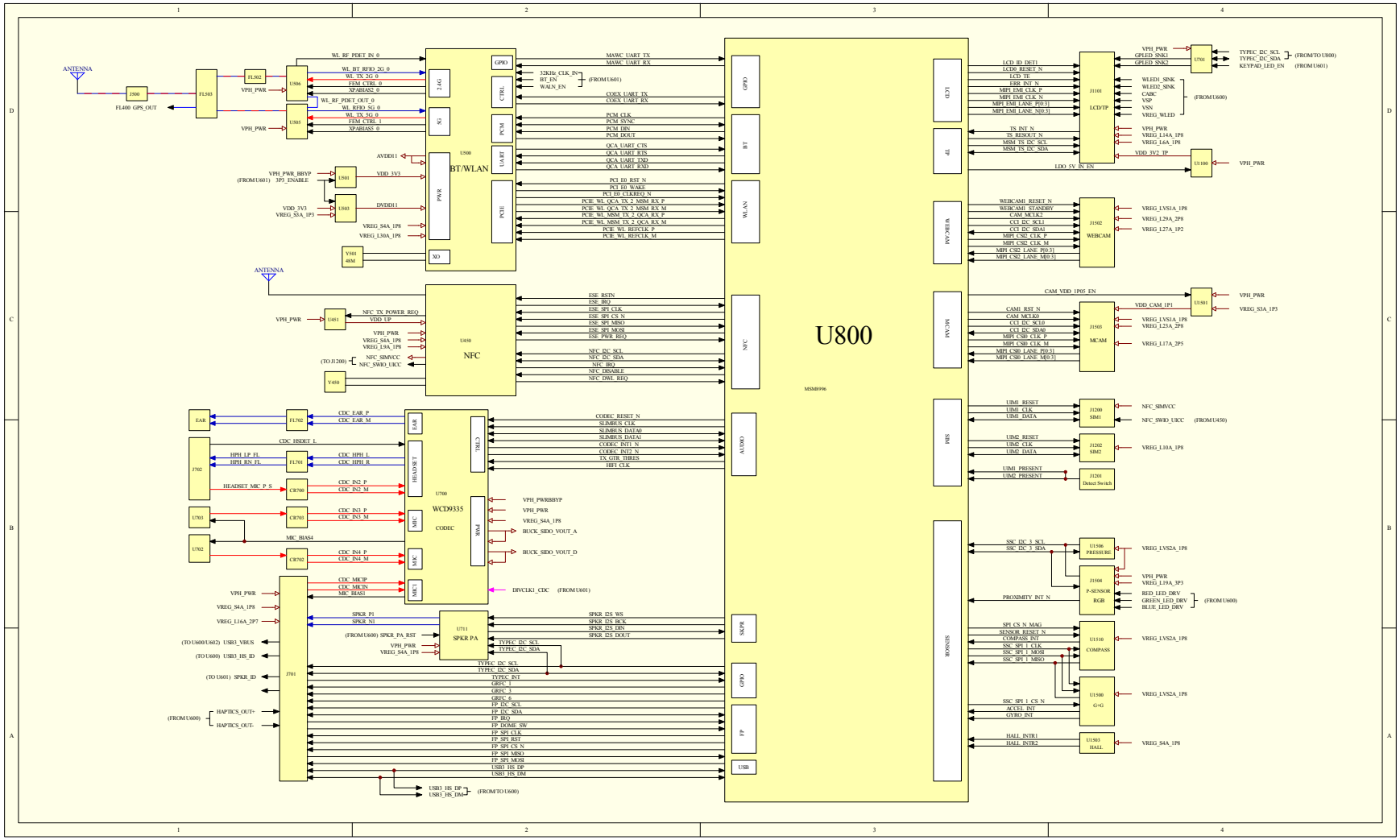
U800
MSM8996
BT/WLAN
U500
NFC
U450
WCD9335
CODEC
U1700
SPKR PA
U1711
ANTENNA
J500
FL400 GPS_OUT
FL501
FL502
U506
U505
U501
U503
Y501
48M
V450
U451
EAR
FL700
FL701
FL703
J702
HEADSET
CR700
CR701
CR702
U703
U702
J701
MIC
MIC2
DMIC
DMIC1
RX0
RX1
TX0
TX1
2.4G
5G
PWR
XO
GPIO
CTRL
PCM
UART
PCIE
BIT
WLAN
AUDIO
SKPR
FP
USB
LCD
TP
WEBCAM
MCAM
SIM
SENSOR
J1101
LCD/TP
U701
U1100
J1502
WEBCAM
U1501
J1503
MCAM
J1200
SIM1
J1202
SIM2
J1201
Detect Switch
U1506
PRESSURE
J1504
P-SENSOR
RGB
U1510
COMPASS
U1500
G+G
U1503
HALL