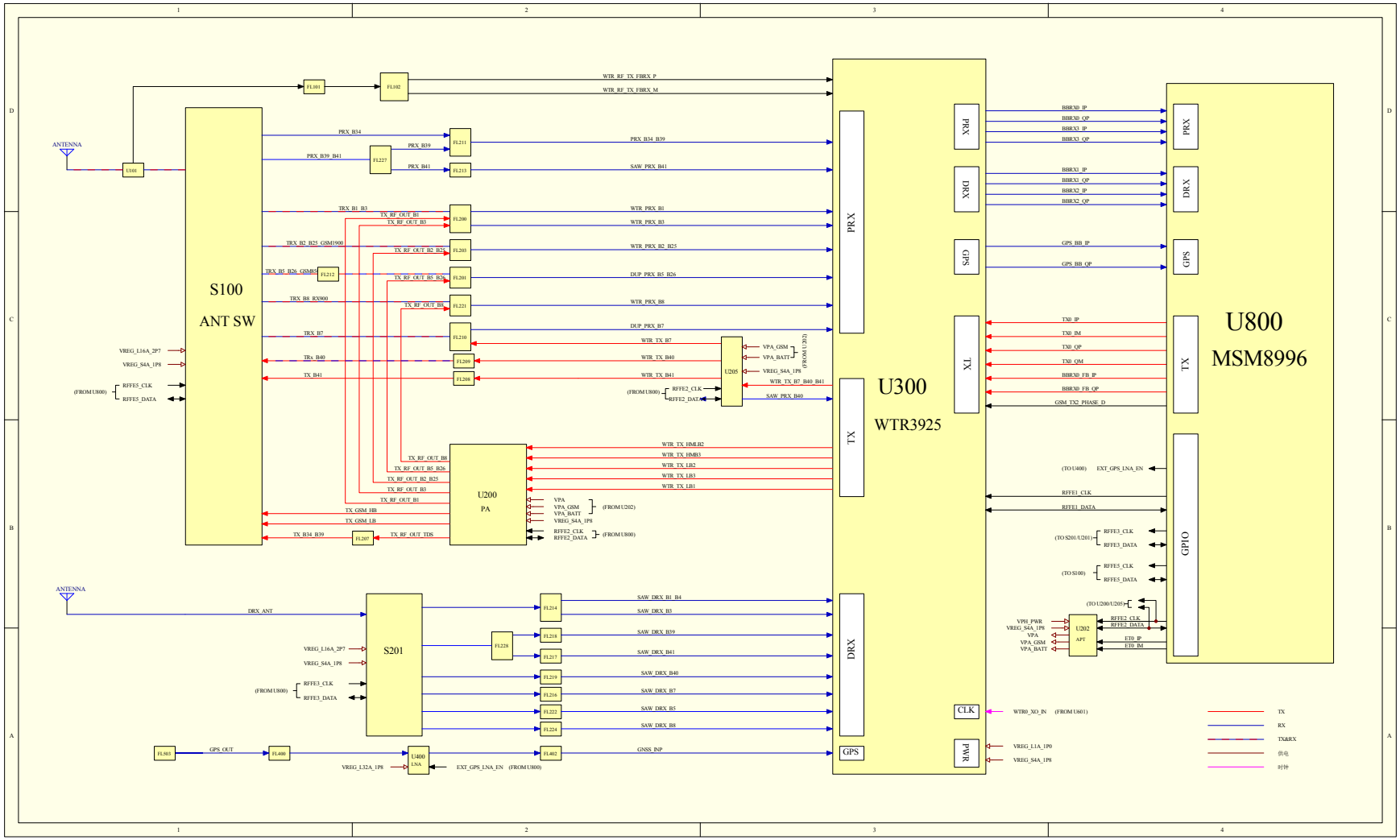
ANTENNA
U101
FL101
FL102
S100
ANT SW
WTR_RF_TX_FBRX_P
WTR_RF_TX_FBRX_M
PRX_B34
PRX_B39
PRX_B39_B41
FL227
PRX_B41
FL211
FL213
PRX_B34_B39
SAW_PRX_B41
TRX_B1_B3
TX_RF_OUT_B1
TX_RF_OUT_B3
FL200
WTR_PRX_B1
WTR_PRX_B3
TRX_B2_B25_GSM1900
TX_RF_OUT_B2_B25
FL203
WTR_PRX_B2_B25
TRX_B5_B26_GSM850
FL212
TX_RF_OUT_B5_B26
FL201
DUP_PRX_B5_B26
TRX_B8_RX900
TX_RF_OUT_B8
FL221
WTR_PRX_B8
TRX_B7
FL210
DUP_PRX_B7
VREG_L16A_2P7
VREG_S4A_1P8
TRx_B40
FL209
WTR_TX_B7
WTR_TX_B40
TX_B41
FL208
WTR_TX_B41
(FROM U800)
RFFE5_CLK
RFFE5_DATA
U205
VPA_GSM
VPA_BATT
VREG_S4A_1P8
(FROM U202)
RFFE2_CLK
RFFE2_DATA
WTR_TX_B7_B40_B41
SAW_PRX_B40
U300
WTR3925
PRX
DRX
GPS
TX
WTR_TX_HMLB2
WTR_TX_HMB3
WTR_TX_LB2
WTR_TX_LB3
WTR_TX_LB1
TX_RF_OUT_B8
TX_RF_OUT_B5_B26
TX_RF_OUT_B2_B25
TX_RF_OUT_B3
TX_RF_OUT_B1
U200
PA
VPA
VPA_GSM
VPA_BATT
VREG_S4A_1P8
(FROM U202)
RFFE2_CLK
RFFE2_DATA
(FROM U800)
TX_GSM_HB
TX_GSM_LB
TX_B34_B39
FL207
TX_RF_OUT_TDS
ANTENNA
DRX_ANT
S201
FL228
FL214
FL218
FL217
FL219
FL216
FL222
FL224
SAW_DRX_B1_B4
SAW_DRX_B3
SAW_DRX_B39
SAW_DRX_B41
SAW_DRX_B40
SAW_DRX_B7
SAW_DRX_B5
SAW_DRX_B8
VREG_L16A_2P7
VREG_S4A_1P8
(FROM U800)
RFFE3_CLK
RFFE3_DATA
FL503
GPS_OUT
FL400
U400
LNA
VREG_L32A_1P8
EXT_GPS_LNA_EN (FROM U800)
FL402
GNSS_INP
BBRX0_IP
BBRX0_QP
BBRX3_IP
BBRX3_QP
BBRX1_IP
BBRX1_QP
BBRX2_IP
BBRX2_QP
GPS_BB_IP
GPS_BB_QP
TX0_IP
TX0_IM
TX0_QP
TX0_QM
BBRX0_FB_IP
BBRX0_FB_QP
GSM_TX2_PHASE_D
U800
MSM8996
GPIO
(TO U400) EXT_GPS_LNA_EN
RFFE1_CLK
RFFE1_DATA
(TO S201/U201)
RFFE3_CLK
RFFE3_DATA
(TO S100)
RFFE5_CLK
RFFE5_DATA
(TO U200/U205)
RFFE2_CLK
RFFE2_DATA
VPH_PWR
VREG_S4A_1P8
VPA
VPA_GSM
VPA_BATT
U202
APT
ET0_IP
ET0_IM
CLK
PWR
WTR0_XO_IN (FROM U601)
VREG_L1A_1P0
VREG_S4A_1P8
TX
RX
TX&RX
供电
时钟

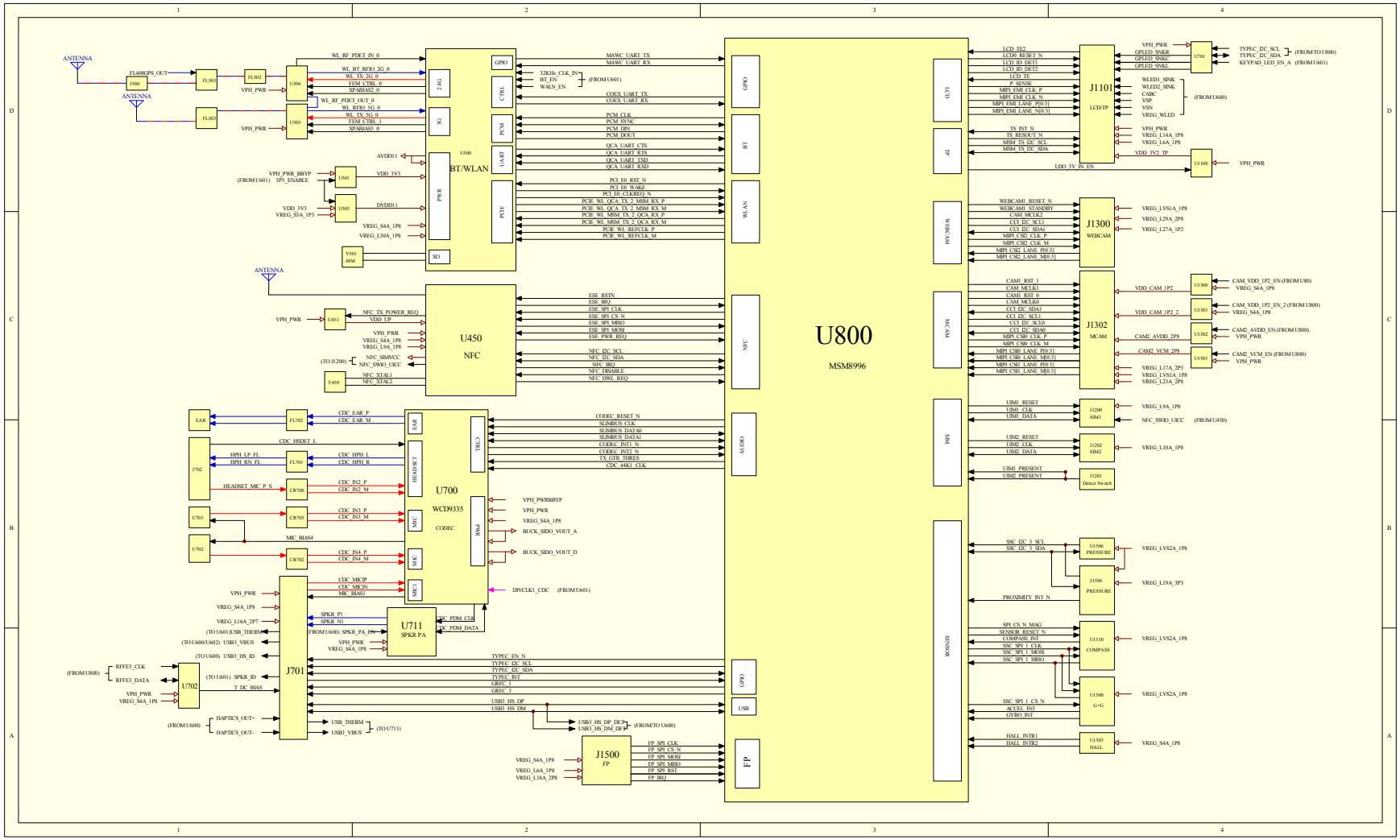
U800
MSM8996
BT/WLAN
U500
U450
NFC
U700
WCD9335
CODEC
U711
SPKR PA
J701
J1500
FP
J1101
LCD/TP
J1300
WEBCAM
J1302
MCAM
J1200
SIM1
J1202
SIM2
J1201
Detect Switch
U1506
PRESSURE
J1504
PRESSURE
U1510
COMPASS
U1500
G+G
U1503
HALL
U702
ANTENNA
FL400GPS_OUT
J500
FL503
FL502
FL503
U506
U505
U501
U503
Y501
48M
U451
Y450
EAR
FL700
J702
FL700
CR700
U703
CR703
U702
CR702
WL_RF_PDET_IN_0
WL_BT_RFIO_2G_0
WL_TX_2G_0
FEM_CTRL_0
XPABIAS2_0
WL_RF_PDET_OUT_0
WL_RFIO_5G_0
WL_TX_5G_0
FEM_CTRL_1
XPABIAS5_0
VPH_PWR
AVDD1 1
VDD_3V3
DVDD1 1
VPH_PWR_BBYP
(FROM U601) 1P5_ENABLE
VREG_S4A_1P8
VREG_L30A_1P8
NFC_TX_POWER_REQ
VDD_UP
NFC_SIMVCC
NFC_SWIO_UICC
(TO J1200)
NFC_XTAL1
NFC_XTAL2
CDC_EAR_P
CDC_EAR_M
CDC_HSDET_L
HPH_LP_FL
HPH_RN_FL
CDC_HPH_L
CDC_HPH_R
HEADSET_MIC_P_S
CDC_IN2_P
CDC_IN2_M
CDC_IN3_P
CDC_IN3_M
MIC_BIAS4
CDC_IN4_P
CDC_IN4_M
CDC_MICIP
CDC_MICIN
MIC_BIAS1
SPKR_P1
SPKR_N1
FROM U600) SPKR_PA_IN
CDC_PDM_CLK
CDC_PDM_DATA
(TO U601)USB_THERM
(TO U600/U602) USB3_VBUS
(TO U600) USB3_HS_ID
(FROM U800)
RFFE3_CLK
RFFE3_DATA
(TO U601) SPKR_ID
T_DC_BIAS
HAPTICS_OUT+
HAPTICS_OUT-
(FROM U600)
USB_THERM
USB3_VBUS
(TO U711)
USB3_HS_DP_DET
USB3_HS_DM_DET
(FROM/TO U600)
TYPEC_EN_N
TYPEC_DC_SCL
TYPEC_DC_SDA
TYPEC_INT
GRFC_1
GRFC_3
USB3_HS_DP
USB3_HS_DM
VREG_S4A_1P8
VREG_L6A_1P8
VREG_L18A_2P8
FP_SPI_CLK
FP_SPI_CS_N
FP_SPI_MOSI
FP_SPI_MISO
FP_SPI_RST
FP_IRQ
MAWC_UART_TX
MAWC_UART_RX
32KHz_CLK_IN
BT_EN
WALN_EN
(FROM U601)
COEX_UART_TX
COEX_UART_RX
PCM_CLK
PCM_SYNC
PCM_DIN
PCM_DOUT
QCA_UART_CTS
QCA_UART_RTS
QCA_UART_TXD
QCA_UART_RXD
PCI_E0_RST_N
PCI_E0_WAKE
PCI_E0_CLKREQ_N
PCIE_WL_QCA_TX_2_MSM_RX_P
PCIE_WL_QCA_TX_2_MSM_RX_M
PCIE_WL_MSM_TX_2_QCA_RX_P
PCIE_WL_MSM_TX_2_QCA_RX_M
PCIE_WL_REFCLK_P
PCIE_WL_REFCLK_M
ESE_RSTN
ESE_IRQ
ESE_SPI_CLK
ESE_SPI_CS_N
ESE_SPI_MISO
ESE_SPI_MOSI
ESE_PWR_REQ
NFC_I2C_SCL
NFC_I2C_SDA
NFC_IRQ
NFC_DISABLE
NFC_DWL_REQ
CODEC_RESET_N
SLIMBUS_CLK
SLIMBUS_DATA0
SLIMBUS_DATA1
CODEC_INT1_N
CODEC_INT2_N
TX_GTR_THRES
CDC_44K1_CLK
VPH_PWRBBYP
BUCK_SIDO_VOUT_A
BUCK_SIDO_VOUT_D
DIVCLK1_CDC (FROM U601)
GPIO
CTRL
PCM
UART
PCIE
2.4G
5G
PWR
XO
TRL3
HEADSET
MIC
WOC
MIC1
EAR
BM4
LCD
TP
WEBCAM
MCAM
NFC
AUDIO
SIM
SENSOR
USB
FP
LCD_TE2
LCD0_RESET_N
LCD_ID_DET1
LCD_ID_DET2
LCD_TE
P_SENSE
MIPI_EMI_CLK_P
MIPI_EMI_CLK_N
MIPI_EMI_LANE_P[0:3]
MIPI_EMI_LANE_N[0:3]
TS_INT_N
TS_RESOET_N
MSM_TS_I2C_SCL
MSM_TS_I2C_SDA
LDO_5V_IN_EN
WLED1_SINK
WLED2_SINK
CABC
VSP
VSN
VREG_WLED
TYPEC_I2C_SCL
TYPEC_I2C_SDA
KEYPAD_LED_EN_A (FROM U601)
(FROM/TO U800)
VREG_L14A_1P8
VDD_3V2_TP
U1100
WEBCAM1_RESET_N
WEBCAM1_STANDBY
CAM_MCLK2
CCI_I2C_SCL1
CCI_I2C_SDA1
MIPI_CSI2_CLK_P
MIPI_CSI2_CLK_M
MIPI_CSI2_LANE_P[0:3]
MIPI_CSI2_LANE_M[0:3]
VREG_L1S1A_1P8
VREG_L29A_2P8
VREG_L27A_1P2
CAM1_RST_1
CAM_MCLK1
CAM1_RST_0
CAM_MCLK0
CCI_I2C_SDA1
CCI_I2C_SCL1
CCI_I2C_SCL0
CCI_I2C_SDA0
MIPI_CSI0_CLK_P
MIPI_CSI0_CLK_M
MIPI_CSI0_LANE_P[0:3]
MIPI_CSI0_LANE_M[0:3]
MIPI_CSI1_LANE_M[0:3]
VDD_CAM_1P2
VDD_CAM_1P2_2
CAM2_AVDD_2P8
CAM2_VCM_2P8
U1300
U1301
U1302
U1501
CAM_VDD_1P2_EN (FROM U80)
VREG_S4A_1P8
CAM_VDD_1P2_EN_2 (FROM U800)
CAM2_AVDD_EN (FROM U800)
VPH_PWR
CAM2_VCM_EN (FROM U800)
VREG_L17A_2P5
VREG_L1S1A_1P8
VREG_L23A_2P8
UIM1_RESET
UIM1_CLK
UIM1_DATA
UIM1_PRESENT
UIM2_RESET
UIM2_CLK
UIM2_DATA
UIM2_PRESENT
VREG_L9A_1P8
NFC_SWIO_UICC (FROM U450)
VREG_L10A_1P8
SSC_I2C_3_SCL
SSC_I2C_3_SDA
PROXIMITY_INT_N
VREG_LVS2A_1P8
VREG_L19A_3P3
SPI_CS_N_MAG
SENSOR_RESET_N
COMPASS_INT
SSC_SPI_1_CLK
SSC_SPI_1_MOSI
SSC_SPI_1_MISO
SSC_SPI_1_CS_N
ACCEL_INT
GYRO_INT
HALL_INTR1
HALL_INTR2

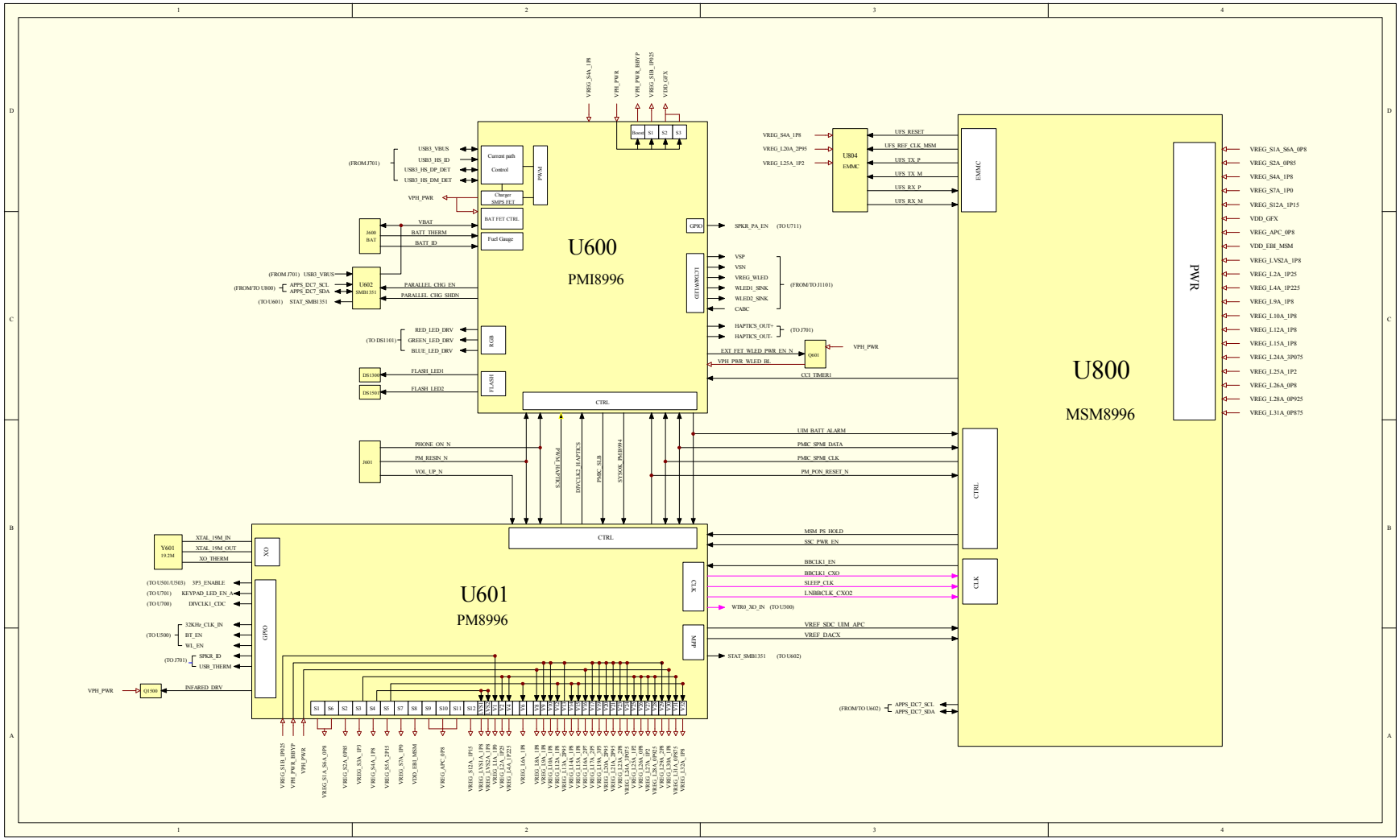
U600
PMI8996
U601
PM8996
U800
MSM8996
U804
EMMC
J600
BAT
U602
SMB1351
J601
Y601
19.2M
Q1500
Q601
DS1360
DS1501
(FROM J701)
USB3_VBUS
USB3_HS_ID
USB3_HS_DP_DET
USB3_HS_DM_DET
VPH_PWR
VBAT
BATT_THERM
BATT_ID
(FROM J701) USB3_VBUS
(FROM/TO U800) APPS_I2C7_SCL
APPS_I2C7_SDA
(TO U601) STAT_SMBI1351
PARALLEL_CHG_EN
PARALLEL_CHG_SHDN
(TO DS1101)
RED_LED_DRV
GREEN_LED_DRV
BLUE_LED_DRV
FLASH_LED1
FLASH_LED2
PHONE_ON_N
PM_RESIN_N
VOL_UP_N
XTAL_19M_IN
XTAL_19M_OUT
XO_THERM
(TO U501/U503) 3P3_ENABLE
(TO U701) KEYPAD_LED_EN_A
(TO U700) DIVCLK1_CDC
(TO U500)
32KHz_CLK_IN
BT_EN
WL_EN
(TO J701)
SPKR_ID
USB_THERM
INFARED_DRV
VREG_S4A_1P8
VPH_PWR
VPH_PWR_BHVP
VREG_S1B_1P025
VDD_GFX
VREG_L20A_2P95
VREG_L25A_1P2
UFS_RESET
UFS_REF_CLK_MSM
UFS_TX_P
UFS_TX_M
UFS_RX_P
UFS_RX_M
SPKR_PA_EN (TO U711)
VSP
VSN
VREG_WLED
WLED1_SINK
WLED2_SINK
CABC
(FROM/TO J1101)
HAPTICS_OUT+
HAPTICS_OUT-
(TO J701)
EXT_FET_WLED_PWR_EN_N
VPH_PWR_WLED_BL
CCI_TIMER1
UIM_BATT_ALARM
PMIC_SPMI_DATA
PMIC_SPMI_CLK
PM_PON_RESET_N
MSM_PS_HOLD
SSC_PWR_EN
BBCLK1_EN
BBCLK1_CXO
SLEEP_CLK
LNBBCLK_CXO2
WTR0_XO_IN (TO U300)
VREF_SDC_UIM_APC
VREF_DACX
STAT_SMBI1351 (TO U602)
(FROM/TO U602) APPS_I2C7_SCL
APPS_I2C7_SDA
VREG_S1A_S6A_0P8
VREG_S2A_0P85
VREG_S4A_1P8
VREG_S7A_1P0
VREG_S12A_1P15
VDD_GFX
VREG_APC_0P8
VDD_EBI_MSM
VREG_LVS2A_1P8
VREG_L2A_1P25
VREG_L4A_1P225
VREG_L9A_1P8
VREG_L10A_1P8
VREG_L12A_1P8
VREG_L15A_1P8
VREG_L24A_3P075
VREG_L25A_1P2
VREG_L26A_0P8
VREG_L28A_0P925
VREG_L31A_0P875