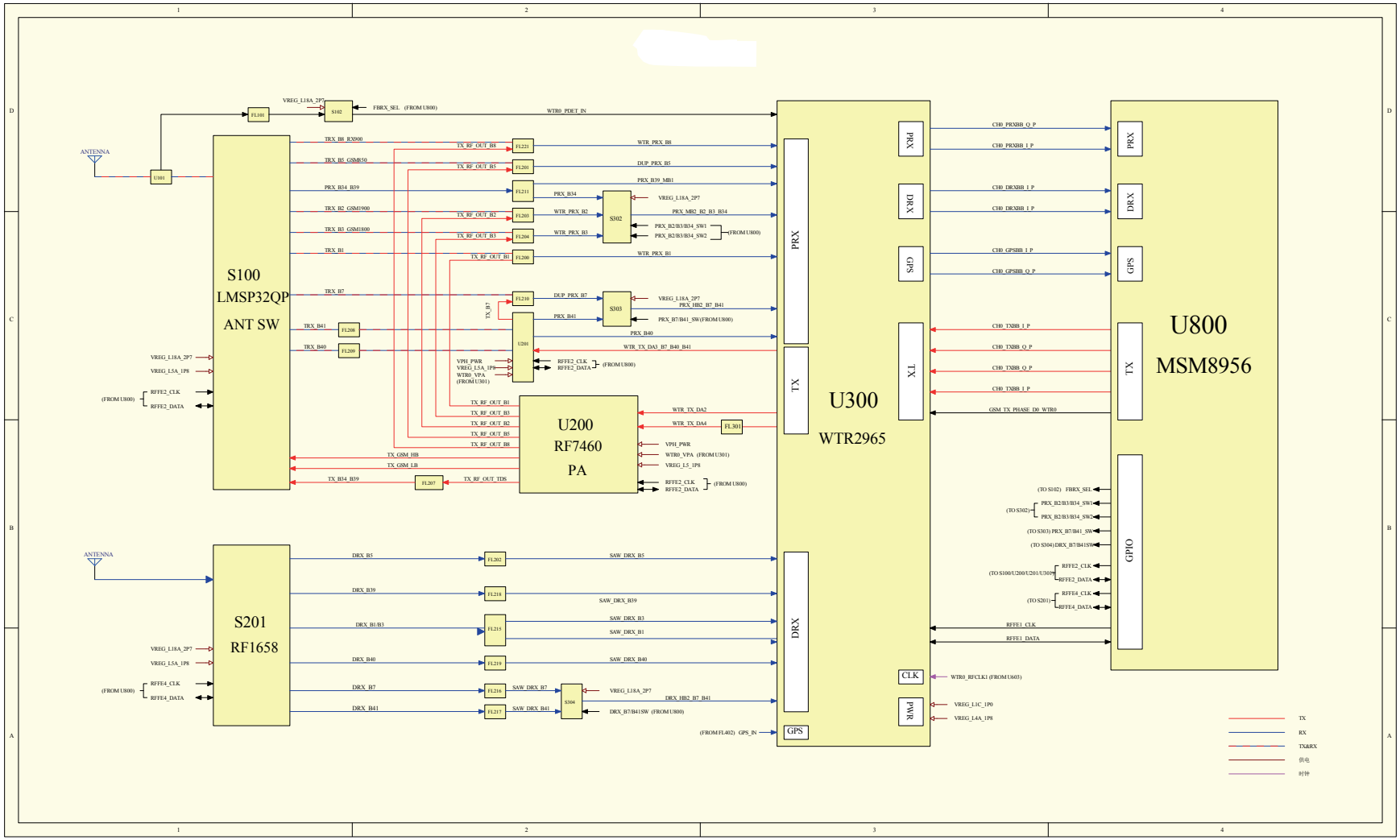
S100
LMSP32QP
ANT SW
U300
WTR2965
U800
MSM8956
U200
RF7460
PA
S201
RF1658
ANTENNA
PRX
DRX
TX
GPS
CLK
PWR
GPIO
S102
S302
S303
S304
U201
FL101
FL201
FL202
FL203
FL204
FL206
FL207
FL208
FL209
FL210
FL211
FL215
FL216
FL217
FL218
FL219
FL221
FL301
VREG_L18A_2P7
FBRX_SEL (FROM U800)
WTR0_PDET_IN
TRX_B8_RX900
TRX_B5_GSMB850
PRX_B34_B39
TRX_B2_GSM1900
TRX_B3_GSM1800
TRX_B1
TRX_B7
TRX_B41
TRX_B40
TX_RF_OUT_B8
TX_RF_OUT_B5
TX_RF_OUT_B2
TX_RF_OUT_B3
TX_RF_OUT_B1
TX_B7
WTR_PRX_B8
DUP_PRX_B5
PRX_B39_MB1
PRX_B34
WTR_PRX_B2
WTR_PRX_B3
PRX_MB2_B2_B3_B34
PRX_B2/B3/B34_SW1
PRX_B2/B3/B34_SW2
(FROM U800)
WTR_PRX_B1
DUP_PRX_B7
PRX_B41
PRX_HB2_B7_B41
PRX_B7/B41_SW(FROM U800)
PRX_B40
WTR_TX_DA3_B7_B40_B41
VPH_PWR
VREG_L5A_1P8
WTR0_VPA
(FROM U301)
RFFE2_CLK
RFFE2_DATA
WTR_TX_DA2
WTR_TX_DA4
TX_GSM_HB
TX_GSM_LB
TX_B34_B39
TX_RF_OUT_TDS
DRX_B5
DRX_B39
DRX_B1/B3
DRX_B40
DRX_B7
DRX_B41
SAW_DRX_B5
SAW_DRX_B39
SAW_DRX_B3
SAW_DRX_B1
SAW_DRX_B40
SAW_DRX_B7
SAW_DRX_B41
DRX_HB2_B7_B41
DRX_B7/B41SW (FROM U800)
(FROM FL402) GPS_IN
RFFE4_CLK
RFFE4_DATA
CH0_PRXHB_Q_P
CH0_PRXHB_I_P
CH0_DRXHB_I_P
CH0_GPSHB_I_P
CH0_GPSHB_Q_P
CH0_TXHB_I_P
CH0_TXHB_Q_P
GSM_TX_PHASE_D0_WTR0
(TO S102) FBRX_SEL
(TO S302)
(TO S303) PRX_B7/B41_SW
(TO S304) DRX_B7/B41SW
(TO S100/U200/U201/U300)
(TO S201)
RFFE1_CLK
RFFE1_DATA
WTR0_RFCLK1 (FROM U603)
VREG_L1C_1P0
VREG_L4A_1P8
TX
RX
TX&RX
供电
时钟

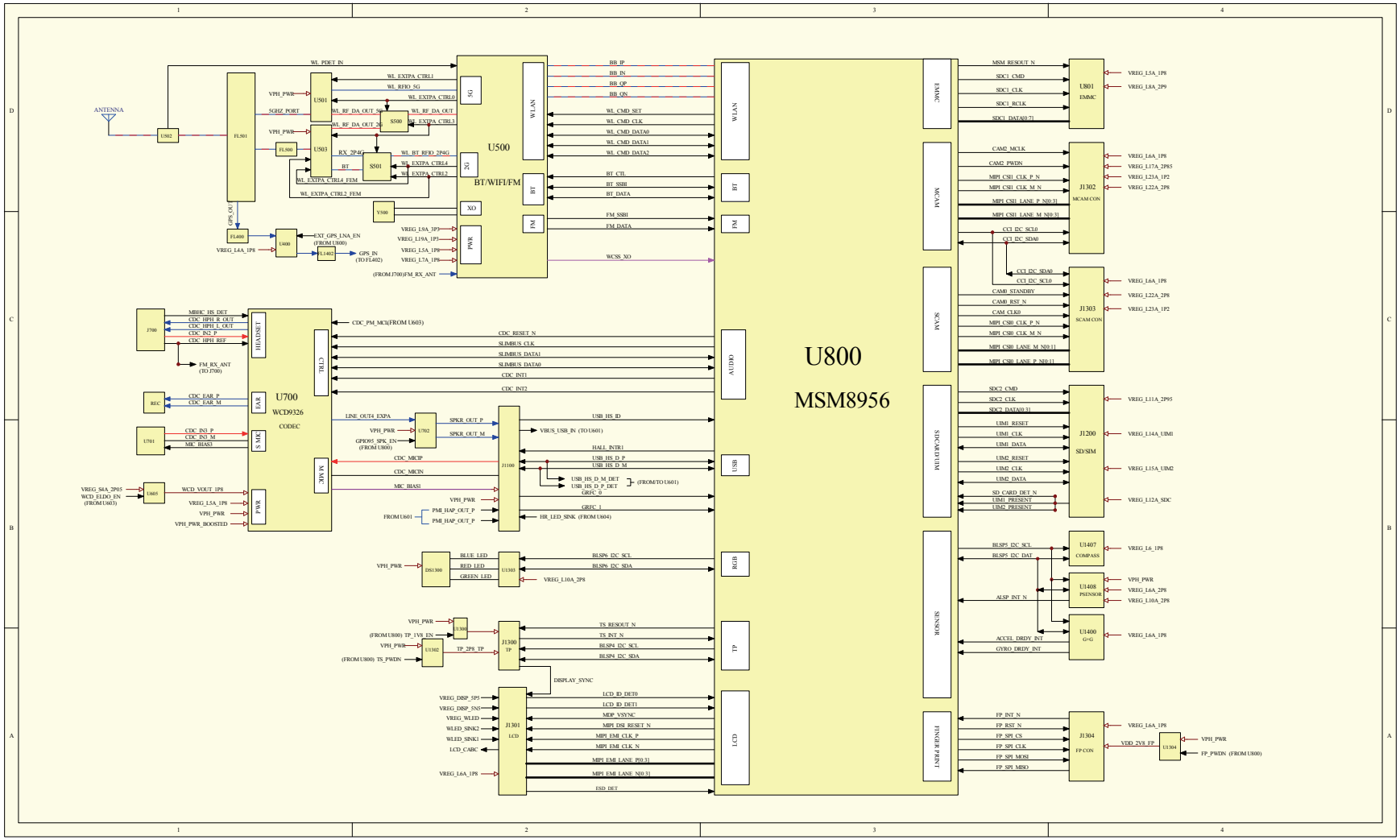
U800
MSM8956
U500
BT/WIFI/FM
U700
WCD9326
CODEC
WLAN
BT
FM
AUDIO
USB
RGB
TP
LCD
EMMC
MCAM
SCAM
SDICARD/UIM
SENSOR
FINGER PRINT
U801
EMMC
J1302
MCAM CON
J1303
SCAM CON
J1200
SD/SIM
U1407
COMPASS
U1408
PSENSOR
U1400
G+G
J1304
FP CON
J1100
J1300
TP
J1301
LCD
ANTENNA
U502
FL501
U501
U503
S500
S501
FL500
FL400
U400
FL402
Y500
J700
REC
U701
U605
U702
DS1300
U1303
U1302
U1304
HEADSET
EAR
S MIC
3DB MIC
PWR
CTRL2
WL_PDET_IN
WL_EXTPA_CTRL1
WL_RFIO_5G
WL_EXTPA_CTRL0
WL_RF_DA_OUT_5G
WL_RF_DA_OUT
WL_RF_DA_OUT_2G
WL_EXTPA_CTRL3
VPH_PWR
5GHZ_PORT
RX_2P4G
WL_BT_RFIO_2P4G
BT
WL_EXTPA_CTRL4
WL_EXTPA_CTRL2
WL_EXTPA_CTRL4_FEM
WL_EXTPA_CTRL2_FEM
GPS_OUT
EXT_GPS_LNA_EN
(FROM U800)
VREG_L4A_1P8
GPS_IN
(TO FL402)
VREG_L19A_3P3
VREG_L19A_1P3
VREG_L5A_1P8
VREG_L7A_1P8
(FROM J700)FM_RX_ANT
BB_IP
BB_IN
BB_QP
BB_QN
WL_CMD_SET
WL_CMD_CLK
WL_CMD_DATA0
WL_CMD_DATA1
WL_CMD_DATA2
BT_CTL
BT_SSBI
BT_DATA
FM_SSBI
FM_DATA
WCSS_XO
MSM_RESOUT_N
SDC1_CMD
SDC1_CLK
SDC1_RCLK
SDC1_DATA[0:7]
VREG_L5A_1P8
VREG_L8A_2P9
CAM2_MCLK
CAM2_PWDN
MIPI_CSI1_CLK_P_N
MIPI_CSI1_CLK_M_N
MIPI_CSI1_LANE_P_N[0:3]
MIPI_CSI1_LANE_M_N[0:3]
CCI_I2C_SCL0
CCI_I2C_SDA0
VREG_L6A_1P8
VREG_L17A_2P85
VREG_L23A_1P2
VREG_L22A_2P8
CAM0_STANDBY
CAM0_RST_N
CAM_CLK0
MIPI_CSI0_CLK_P_N
MIPI_CSI0_CLK_M_N
MIPI_CSI0_LANE_M_N[0:1]
MIPI_CSI0_LANE_P_N[0:1]
SDC2_CMD
SDC2_CLK
SDC2_DATA[0:3]
UIM1_RESET
UIM1_CLK
UIM1_DATA
UIM2_RESET
UIM2_CLK
UIM2_DATA
SD_CARD_DET_N
UIM1_PRESENT
UIM2_PRESENT
VREG_L11A_2P95
VREG_L14A_UIM1
VREG_L15A_UIM2
VREG_L12A_SDC
BLSP5_I2C_SCL
BLSP5_I2C_DAT
VREG_L6_1P8
ALSP_INT_N
VPH_PWR
VREG_L6A_2P8
VREG_L10A_2P8
ACCEL_DRDY_INT
GYRO_DRDY_INT
FP_INT_N
FP_RST_N
FP_SPI_CS
FP_SPI_CLK
FP_SPI_MOSI
FP_SPI_MISO
VDD_2V8_FP
FP_PWDN (FROM U800)
MBHC_HS_DET
CDC_HPH_R_OUT
CDC_HPH_L_OUT
CDC_IN2_P
CDC_HPH_REF
FM_RX_ANT
(TO J700)
CDC_EAR_P
CDC_EAR_M
CDC_IN3_P
CDC_IN3_M
MIC_BIAS3
VREG_S4A_2P05
WCD_ELDO_EN
(FROM U603)
WCD_VOUT_1P8
VREG_L5A_1P8
VPH_PWR_BOOSTED
CDC_PM_MCI(FROM U603)
CDC_RESET_N
SLIMBUS_CLK
SLIMBUS_DATA1
SLIMBUS_DATA0
CDC_INT1
CDC_INT2
LINE_OUT4_EXPA
SPKR_OUT_P
SPKR_OUT_M
GPIO95_SPK_EN
(FROM U800)
USB_HS_ID
VBUS_USB_IN (TO U601)
HALL_INTR1
USB_HS_D_P
USB_HS_D_M
USB_HS_D_M_DET
USB_HS_D_P_DET
(FROM/TO U601)
CDC_MICIP
CDC_MICIN
MIC_BIAS1
GRFC_0
GRFC_1
FROM U601
PMI_HAP_OUT_P
HR_LED_SINK (FROM U604)
BLUE_LED
RED_LED
GREEN_LED
VREG_L10A_2P8
BLSP6_I2C_SCL
BLSP6_I2C_SDA
(FROM U800) TP_1V8_EN
(FROM U800) TS_PWDN
TP_2P8_TP
TS_RESOUT_N
TS_INT_N
BLSP4_I2C_SCL
BLSP4_I2C_SDA
DISPLAY_SYNC
VREG_DISP_5P5
VREG_DISP_5N5
VREG_WLED
WLED_SINK2
WLED_SINK1
LCD_CABC
LCD_ID_DET0
LCD_ID_DET1
MDP_VSYNC
MIPI_DSI_RESET_N
MIPI_EMI_CLK_P
MIPI_EMI_CLK_N
MIPI_EMI_LANE_P[0:3]
MIPI_EMI_LANE_N[0:3]
ESD_DET

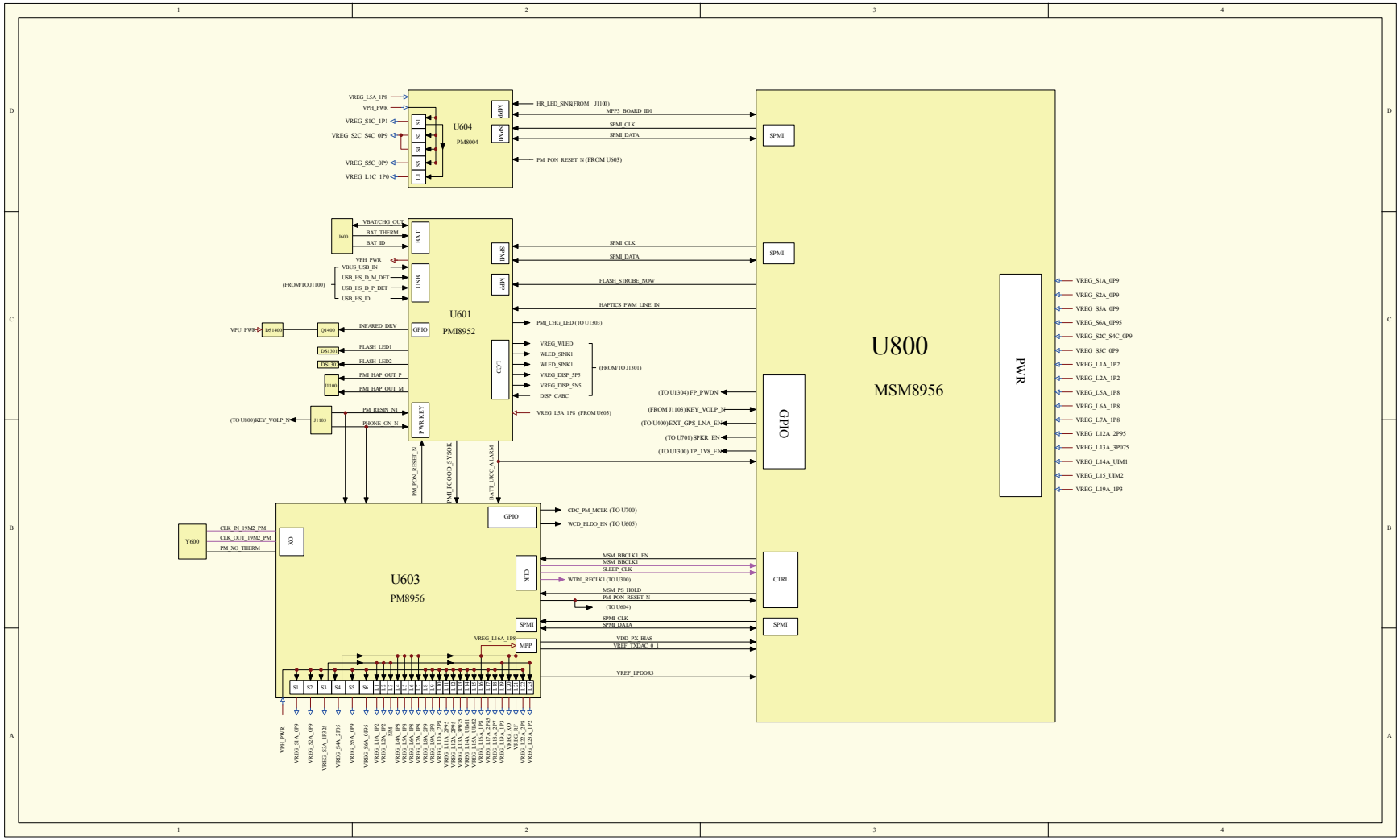
U604
PM8004
VREG_L5A_1P8
VPH_PWR
VREG_S1C_1P1
VREG_S2C_S4C_0P9
VREG_S5C_0P9
VREG_L1C_1P0
S1
S2
S4
S5
L1
SPMI
MPP
HR_LED_SINK(FROM J1100)
MPP3_BOARD_ID1
SPMI_CLK
SPMI_DATA
PM_PON_RESET_N (FROM U603)
U601
PMI8952
J600
VBAT/CHG_OUT
BAT_THERM
BAT_ID
BAT
VPH_PWR
VBUS_USB_IN
USB_HS_D_M_DET
USB_HS_D_P_DET
USB_HS_ID
(FROM/TO J1100)
USB
GPIO
INFARED_DRV
VPU_PWR
DS1480
Q1400
FLASH_LED1
DS1303
FLASH_LED2
DS1303
PMI_HAP_OUT_P
PMI_HAP_OUT_M
J1100
PM_RESIN_N1
PHONE_ON_N
(TO U800)KEY_VOLP_N
J1103
PWR_KEY
LCD
FLASH_STROBE_NOW
HAPTICS_PWM_LINE_IN
PMI_CHG_LED (TO U1303)
VREG_WLED
WLED_SINK1
WLED_SINK1
VREG_DISP_5P5
VREG_DISP_5N5
DISP_CABC
(FROM/TO J1301)
VREG_L5A_1P8 (FROM U603)
PM_PON_RESET_N
PM_PON_GOOD_SYSON
BATT_UICC_A1-ARM
U800
MSM8956
SPMI
GPIO
CTRL
PWR
(TO U1304) FP_PWDN
(FROM J1103) KEY_VOLP_N
(TO U400)EXT_GPS_LNA_EN
(TO U701) SPKR_EN
(TO U1300) TP_1V8_EN
VREG_S1A_0P9
VREG_S2A_0P9
VREG_S5A_0P9
VREG_S6A_0P95
VREG_S2C_S4C_0P9
VREG_S5C_0P9
VREG_L1A_1P2
VREG_L2A_1P2
VREG_L5A_1P8
VREG_L6A_1P8
VREG_L7A_1P8
VREG_L12A_2P95
VREG_L13A_3P075
VREG_L14A_UIM1
VREG_L15_UIM2
VREG_L19A_1P3
U603
PM8956
Y600
CLK_IN_19M2_PM
CLK_OUT_19M2_PM
PM_XO_THERM
XO
GPIO
CDC_PM_MCLK (TO U700)
WCD_ELDO_EN (TO U605)
CLK
MSM_BBCLK1_EN
MSM_BBCLK1
SLEEP_CLK
WTR0_RFCLK1 (TO U300)
MSM_PS_HOLD
PM_PON_RESET_N
(TO U604)
SPMI
SPMI_CLK
SPMI_DATA
MPP
VREG_L16A_1P8
VDD_PX_BIAS
VREF_TXDAC_0_1
VREF_LPDDR3
S1
S2
S3
S4
S5
S6
VPH_PWR
VREG_S1A_0P9
VREG_S2A_0P9
VREG_S5A_1P125
VREG_S4A_2P05
VREG_S6A_0P95
VREG_L1A_1P2
VREG_L2A_1P2
VREG_L4A_1P8
VREG_L5A_1P8
VREG_L6A_1P8
VREG_L7A_1P8
VREG_L10A_2P8
VREG_L11A_2P95
VREG_L12A_2P95
VREG_L13A_3P075
VREG_L14A_1P8
VREG_L15A_UIM2
VREG_L16A_1P8
VREG_L17A_2P85
VREG_L18A_2P7
VREG_L19A_1P3
VREG_XO
VREG_TX
VREG_L23A_3P8
VREG_L23A_1P2