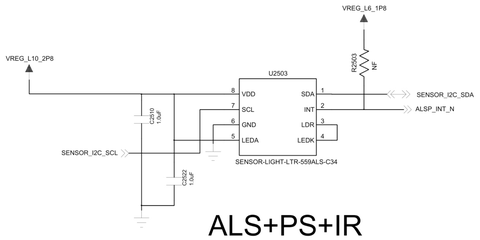

ALS+PS+IR

Liteon:LTR-559ALS-C34

Write	0X46
Read	0X47

Sensortek:STK3311-W34

Write	0X90
Read	0X91

Gyroscope

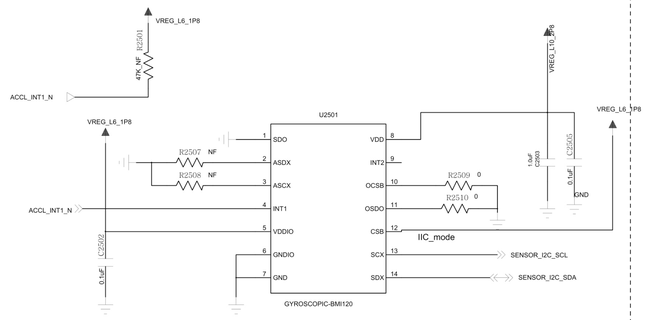

Bosch:BMI120/BMI160

I2C Address@SDO=0	
Write	0XD0
Read	0XD1

Bosch:BMI120/BMI160

I2C Address@SDO=1	
Write	0XD2
Read	0XD3

ST:LSM6DS3TR

I2C Address@SDO=0	
Write	0XD4
Read	0XD5

ST:LSM6DS3TR

I2C Address@SDO=1	
Write	0XD6
Read	0XD7

M-Sensor

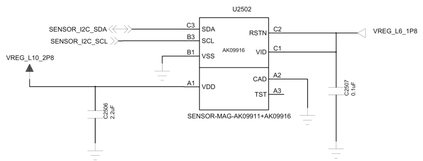

AKM: AK09911

I2C Address@CAD=0	
Write	0X18
Read	0X19

AKM: AK09911

I2C Address@CAD=1	
Write	0X1A
Read	0X1B

Yamaha:YAS537

Write	0X5C
Read	0X5D

INFARED LEDS

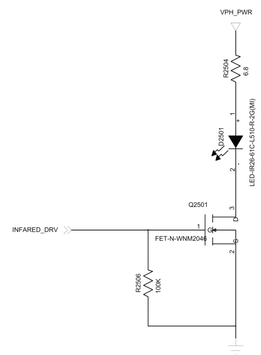

SENSORS

QUALCOMM Technologies, Inc.
5775 Morehouse Drive
San Diego, CA 92121-1714
U.S.A.

Title

Size | Name | Rev

Date: | Sheet | of

Vout=3.0V,I-lim=1A

SIM1

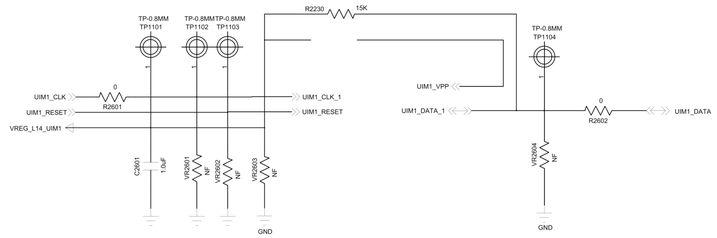

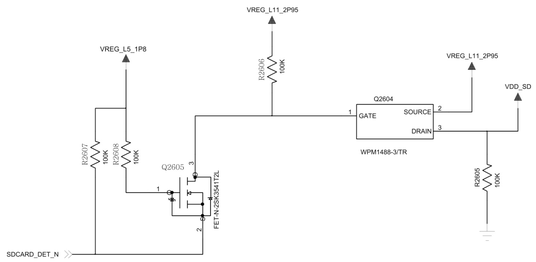

SIM2

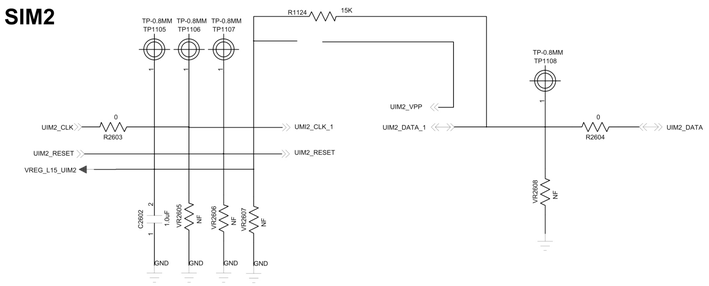

SD CARD

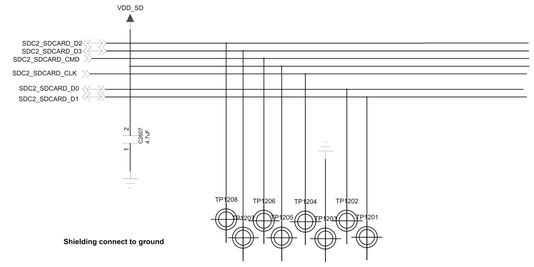

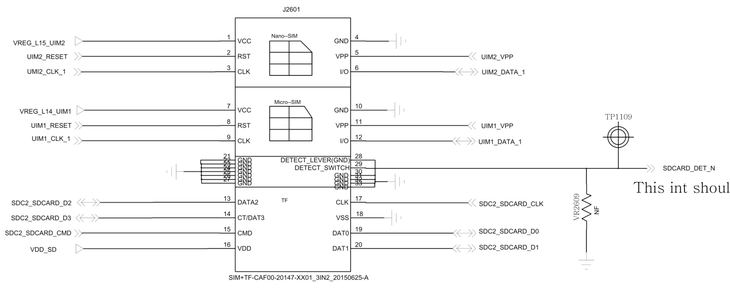

This int should give to GPIO54/GPIO58/GPIO67

SIM/TF card

QUALCOMM Technologies,Inc.
5775 Morehouse Drive
San Diego, CA 92121-1714
U.S.A.

Title

Sheet henxtec.com

Size	Name	Rev

Date: Sheet of

Signal	Description
KEY_VOL_UP_N	Volume Up
PM_RESIN_N1	Volume Down
KYPD_PWR_N1	PWER_ON
PM_RESIN_N1 + KYPD_PWR_N1	Hardware Reset

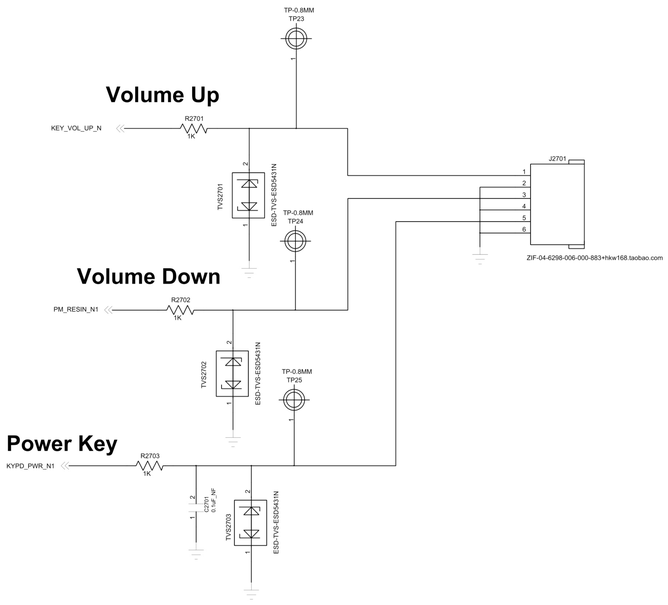

Keypad/LED/Status indicator

QUALCOMM Technologies, Inc.
5775 Morehouse Drive
San Diego, CA 92121-1714
U.S.A.

Title

Size | Name | Rev

Date: | Sheet | of

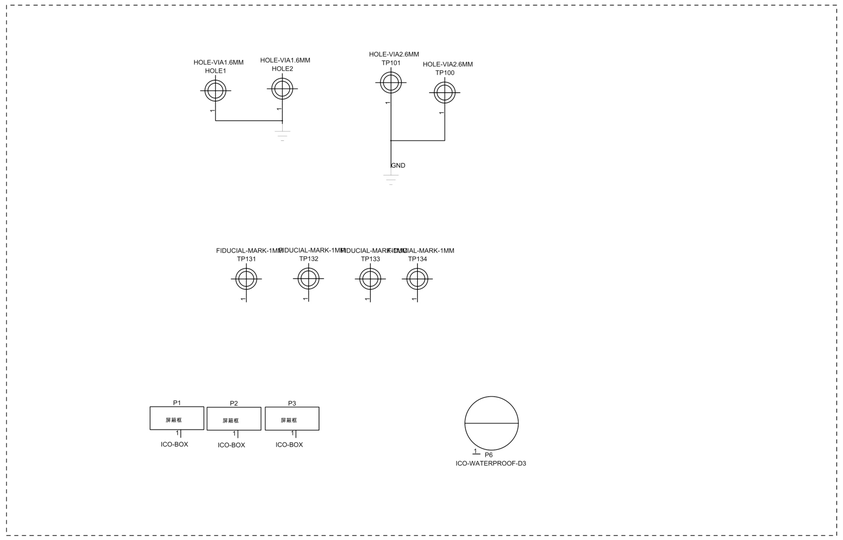

Test Point

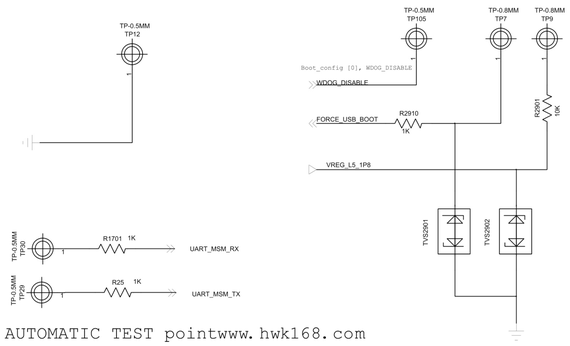

PCBA AUTOMATIC TEST pointwww.hwk168.com

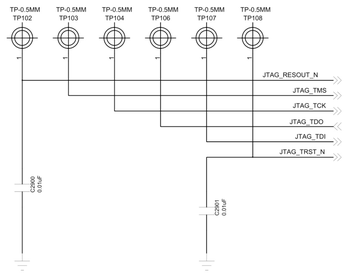

JTAG CONNECTOR

Test Point/Shields

QUALCOMM Technologies,Inc.
5775 Morehouse Drive
San Diego, CA 92121-1714
U.S.A.

Title

Size | Name | Rev

Date: | Sheet | of

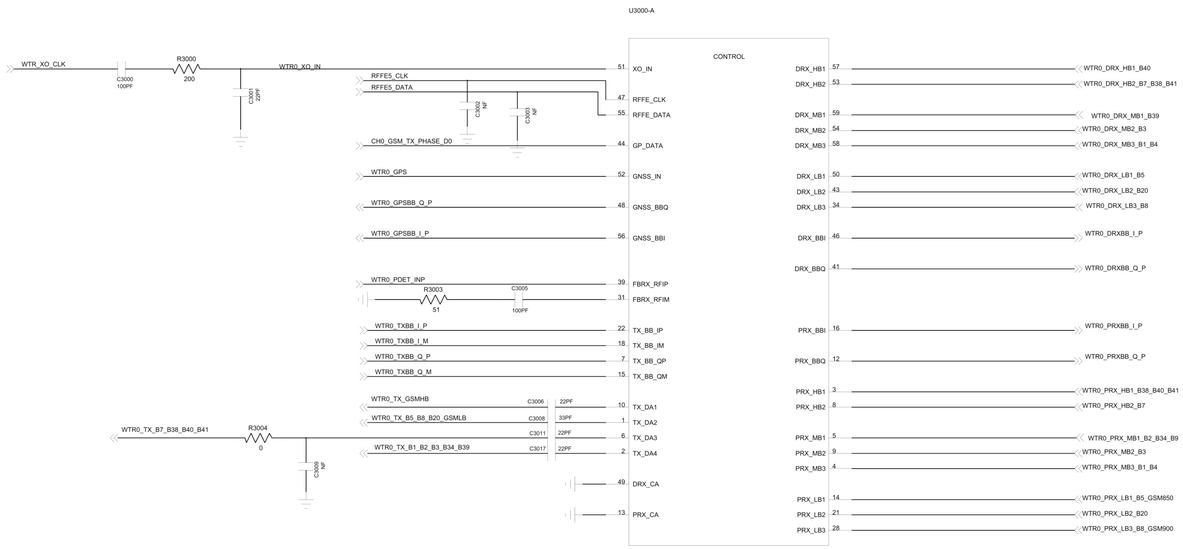

Note:RX ports have DC at the pin,
hwk168.com so it need DC
block,please make sure
there is no DC short to other voltages and GND

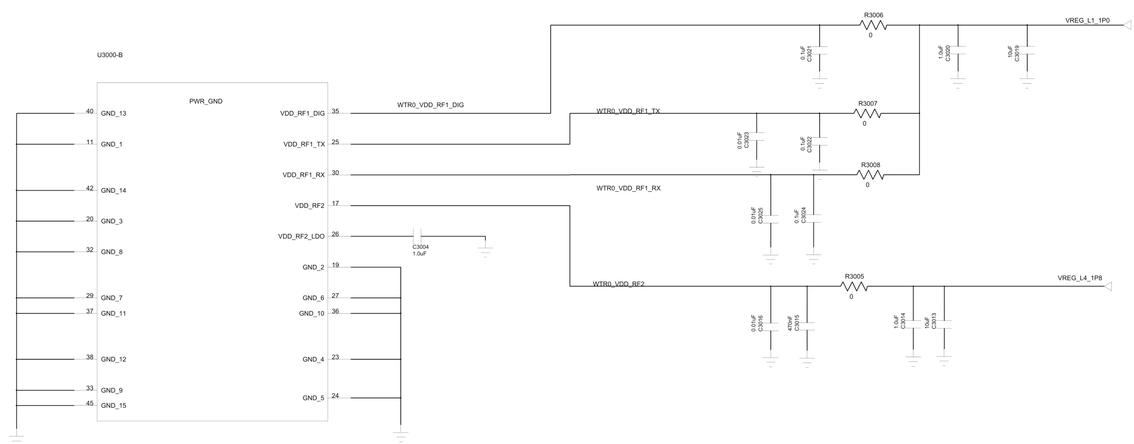

WTR 2955

QUALCOMM Technologies,Inc.
5775 Morehouse Drive
San Diego, CA 92121-1714
U.S.A.

Title

Size | Sheet Name | Rev

Date: | Sheet of

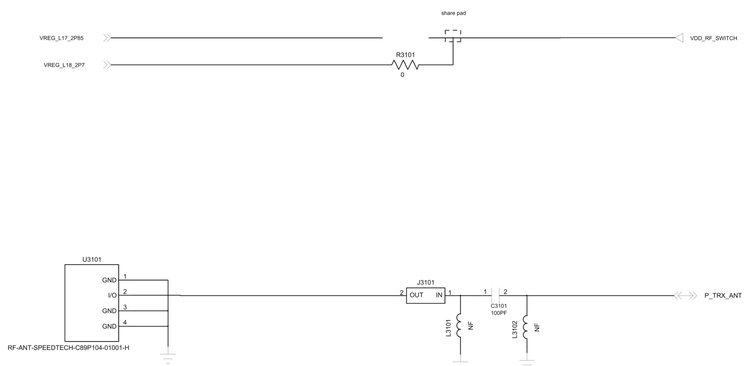

Title

Size | Name | Rev

Date: | Sheet | of

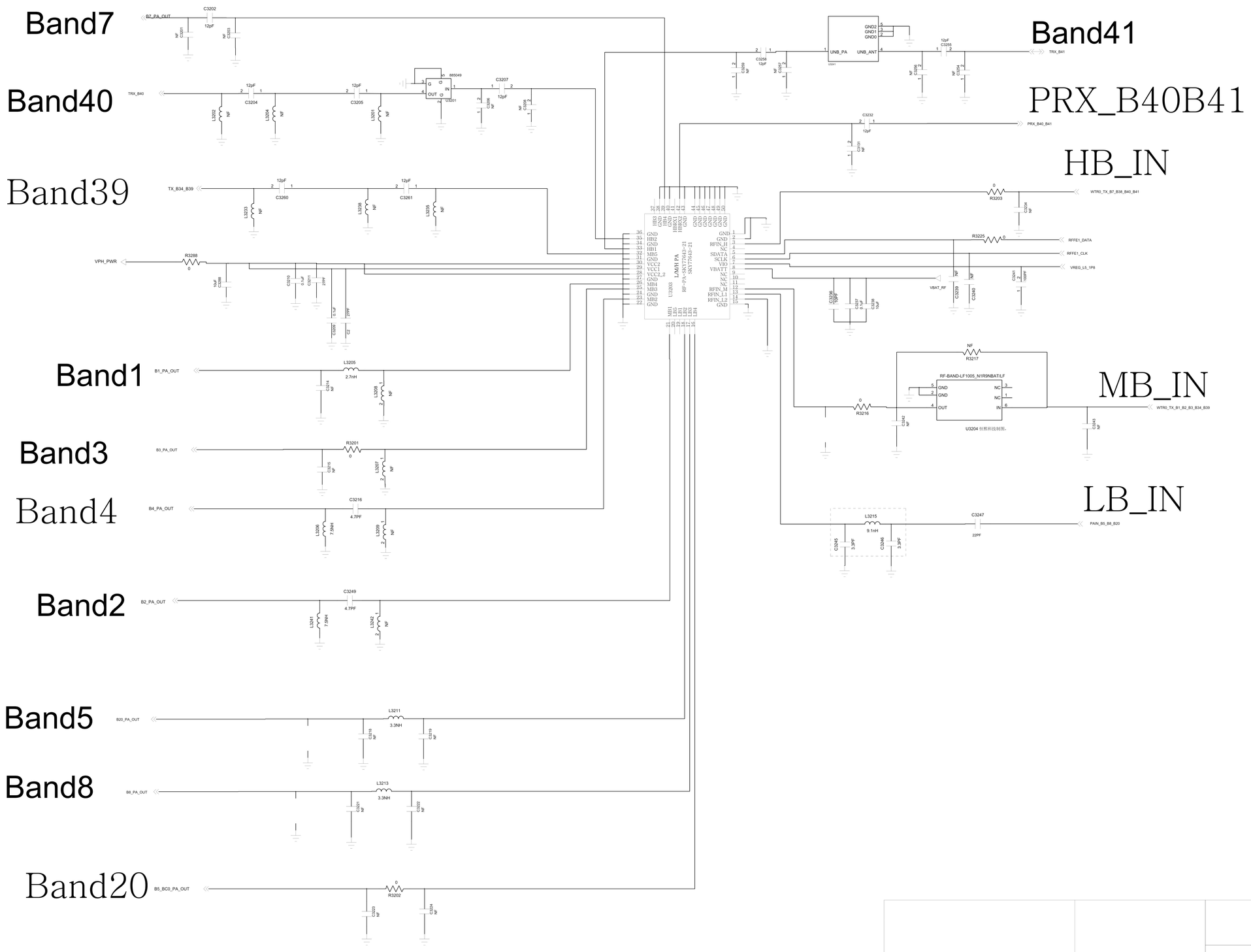

Title

Size | Name | Rev

Date: | Sheet | of

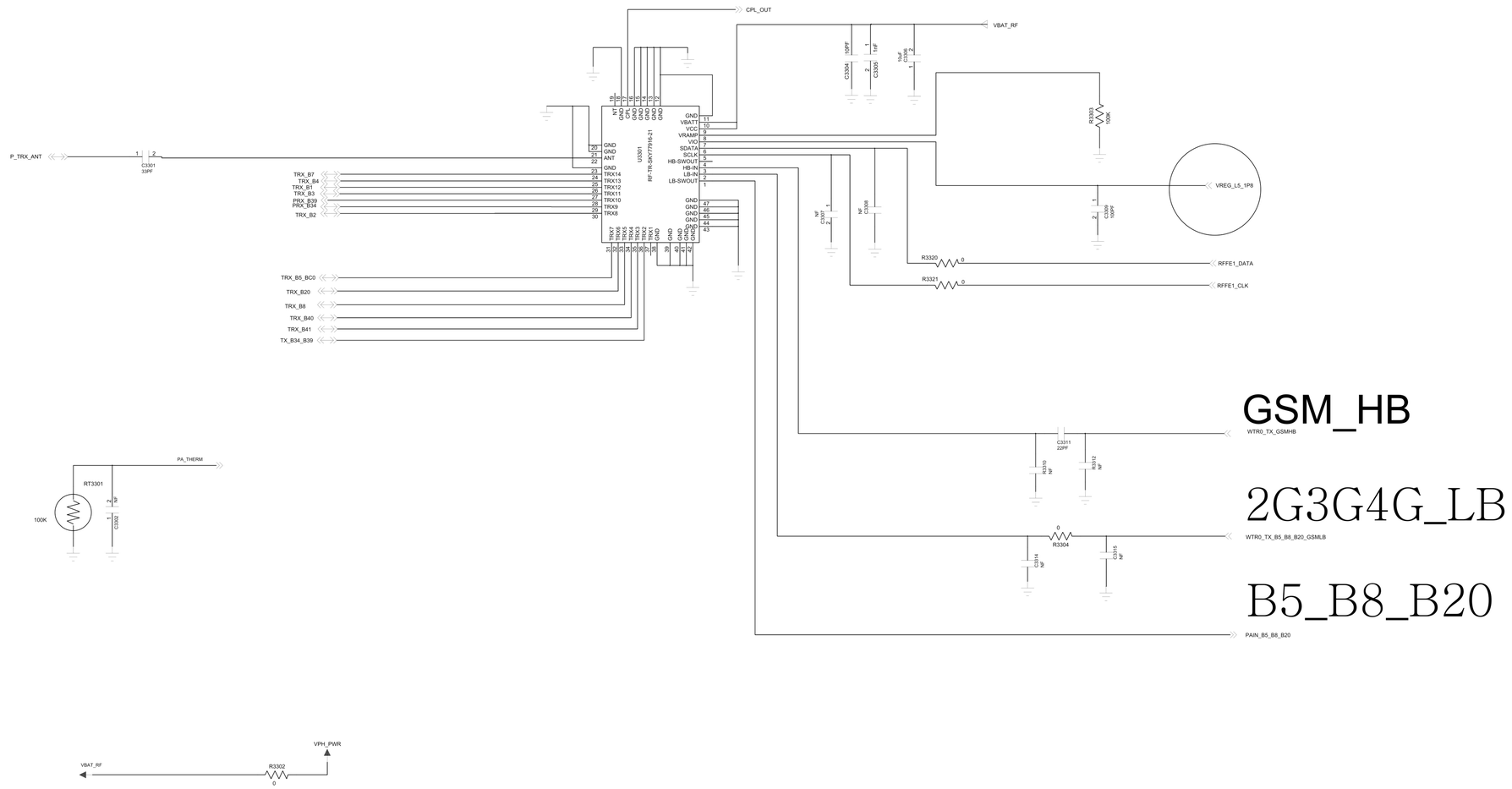

Title

Size | Sheet Name | Rev

Date: | Sheet of

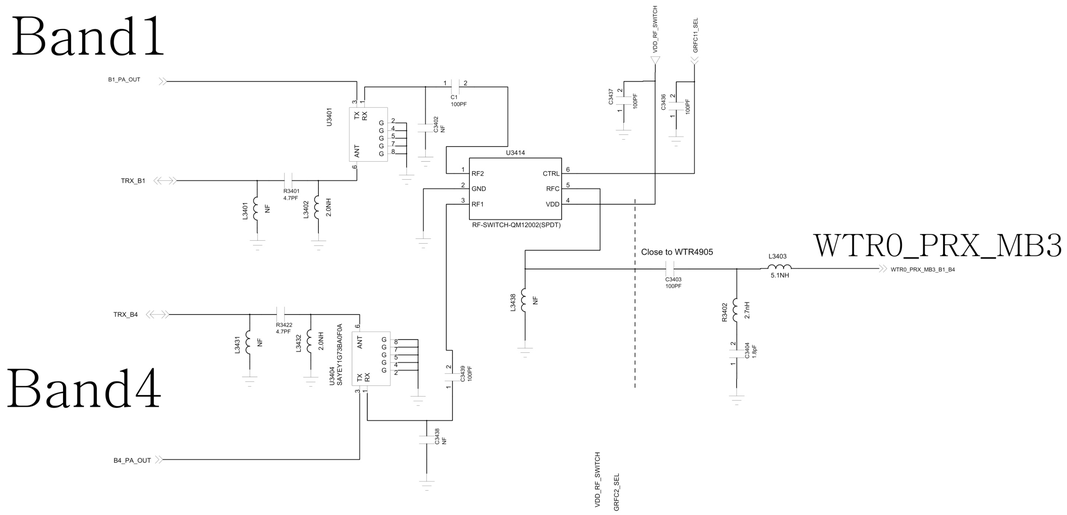

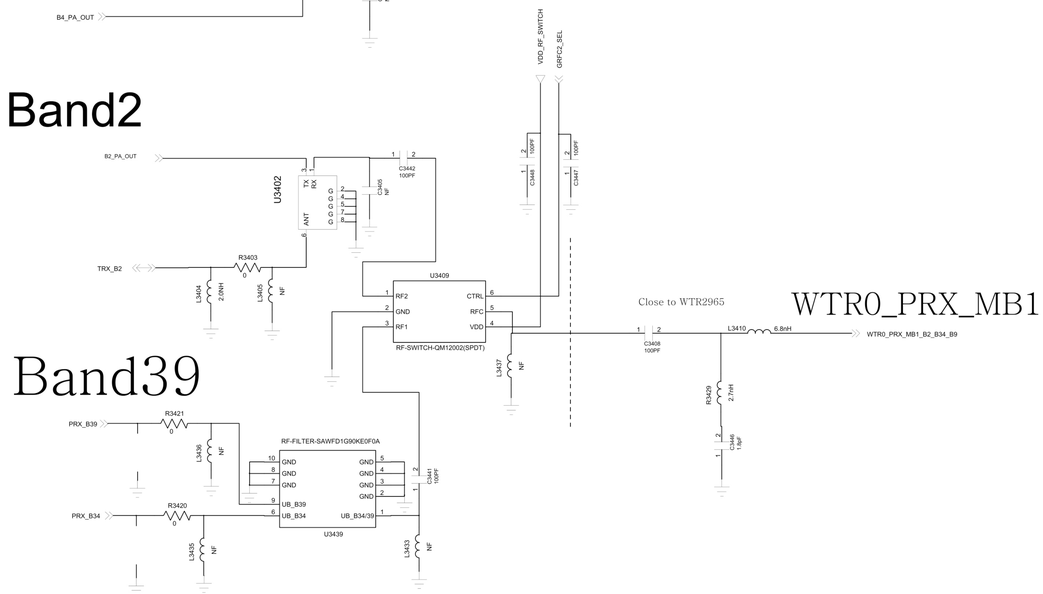

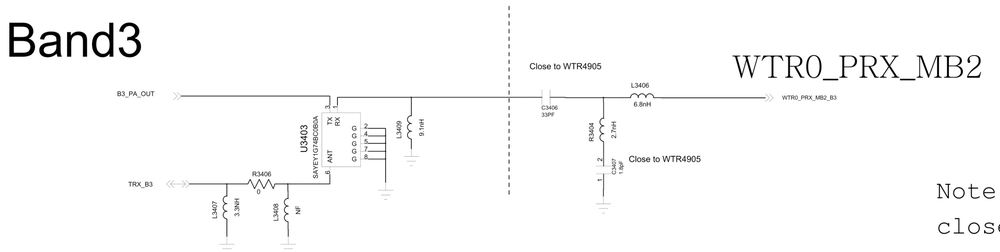

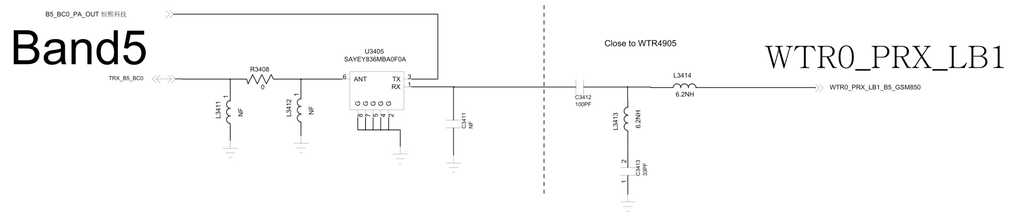

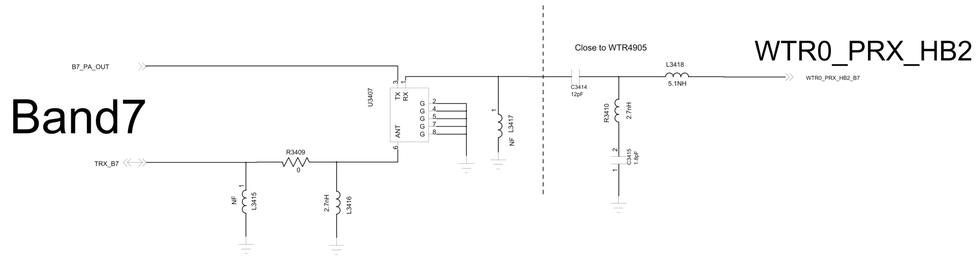

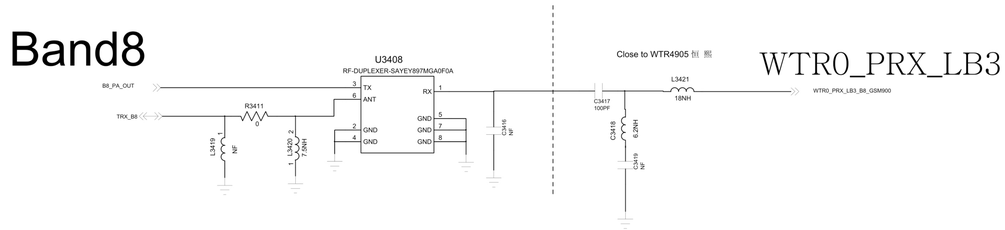

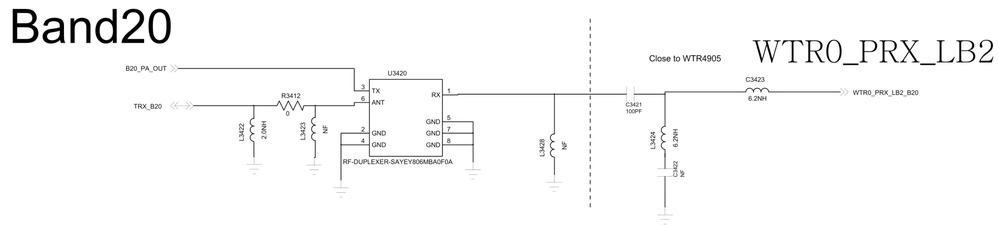

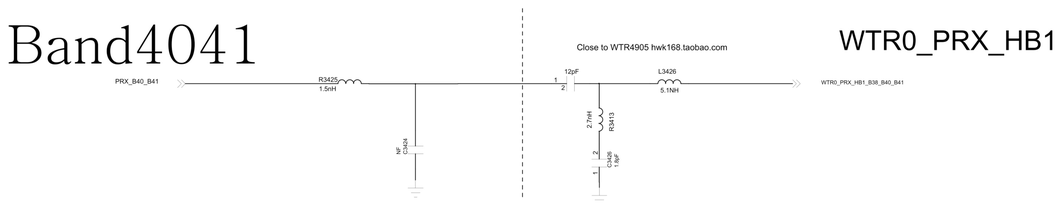

Note:The matching need
close to WTR, RX ports have
DC at the pin, so it need DC block,

Title

Size | Name | Rev

Date: | Sheet | of