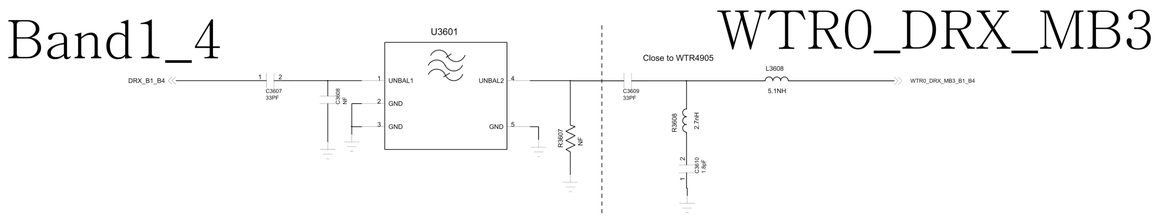

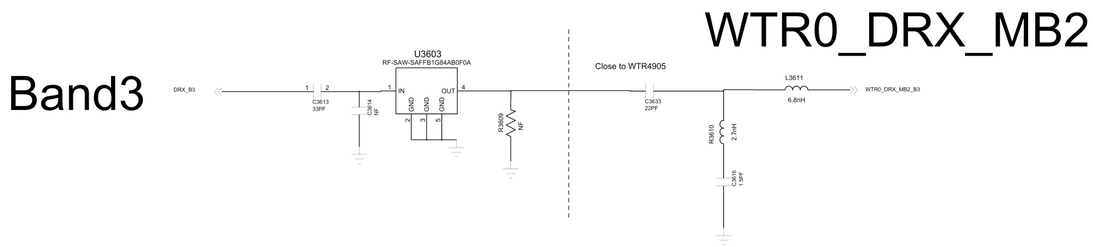

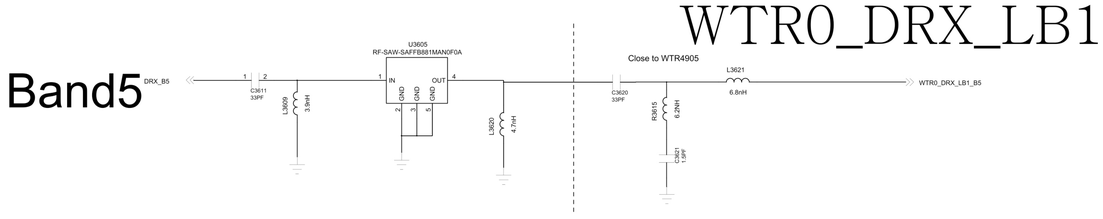

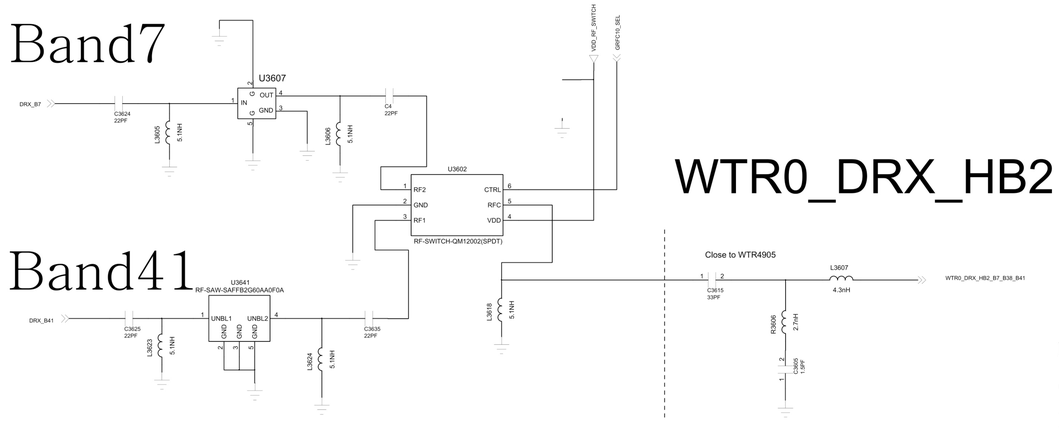

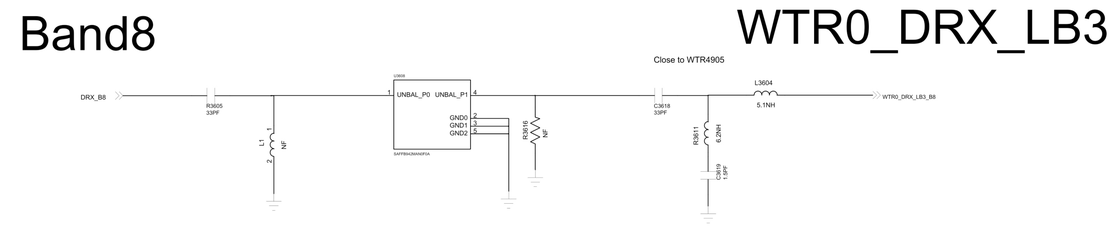

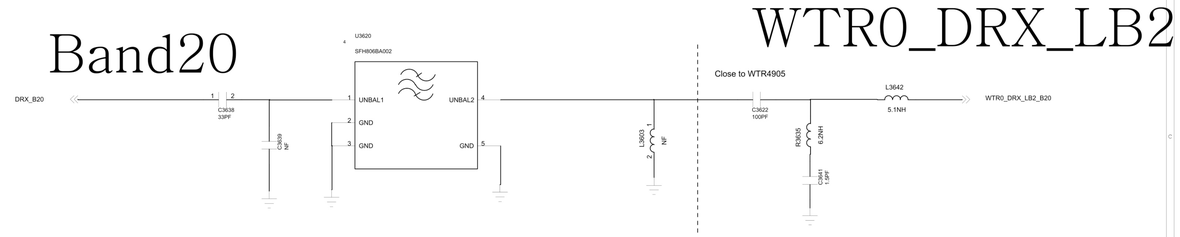

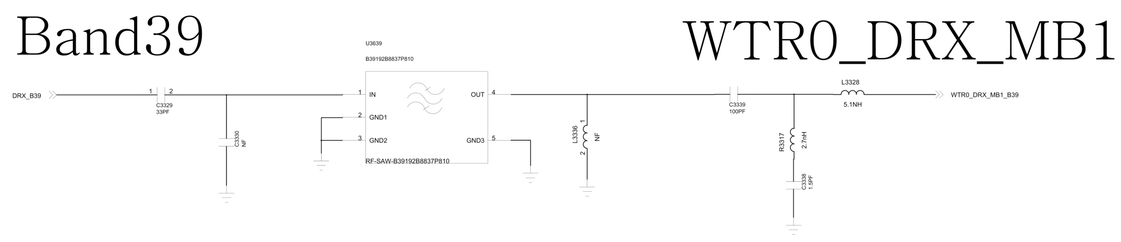

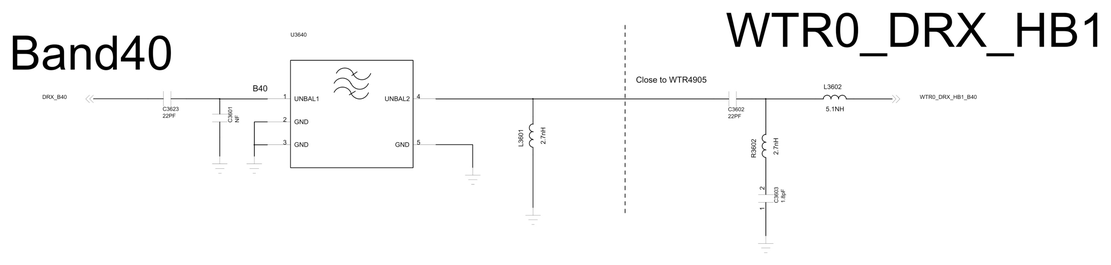

Note:The matching need
close to WTR, RX ports have
DC at the pin, so it need DC block,

Title

Size | Name | Sheet | Rev

Date: | Sheet | of

SPDT

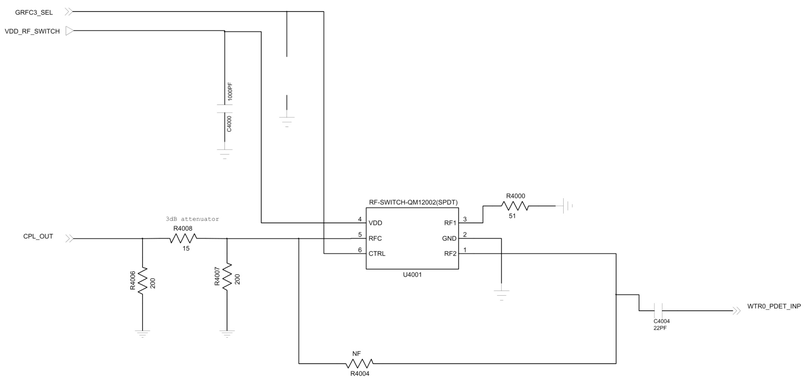

QUALCOMM Technologies, Inc.
5775 Morehouse Drive
San Diego, CA 92121-1714
U.S.A.

Title

Size | Name | Rev

Date: | Sheet | of

Note: Use a signle low impedance power plane/fill VPA for all ET PA VCC1/VCC2.

Refer to 80-NA681-91 rev.B or later revisions for more layout details.

Title

Size | Sheet Name | Rev

Date: | Sheet of

WCN

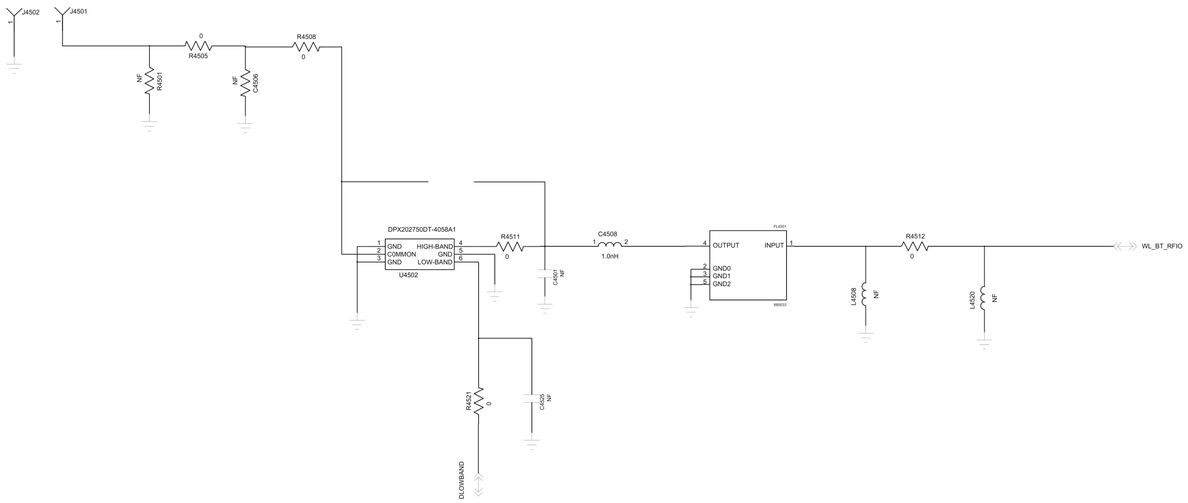

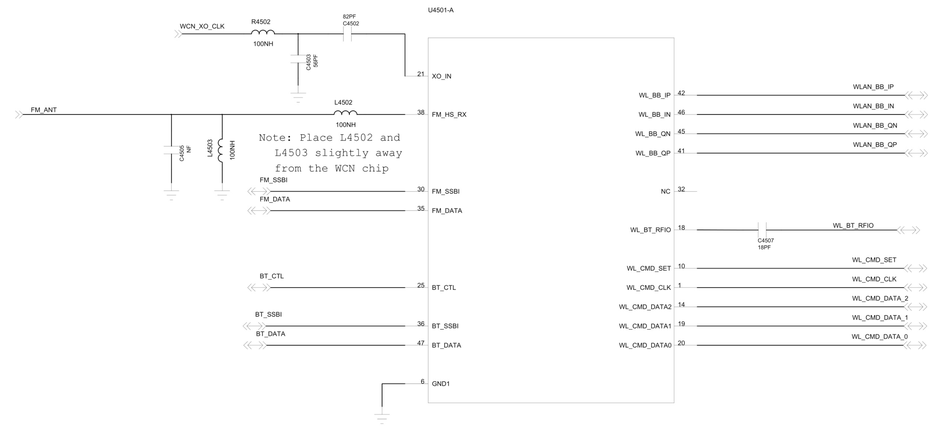

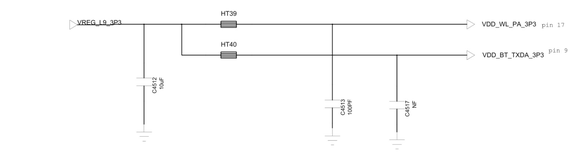

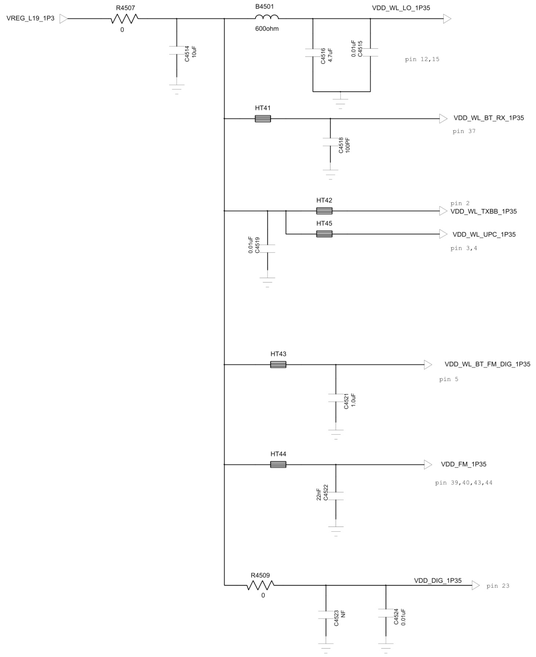

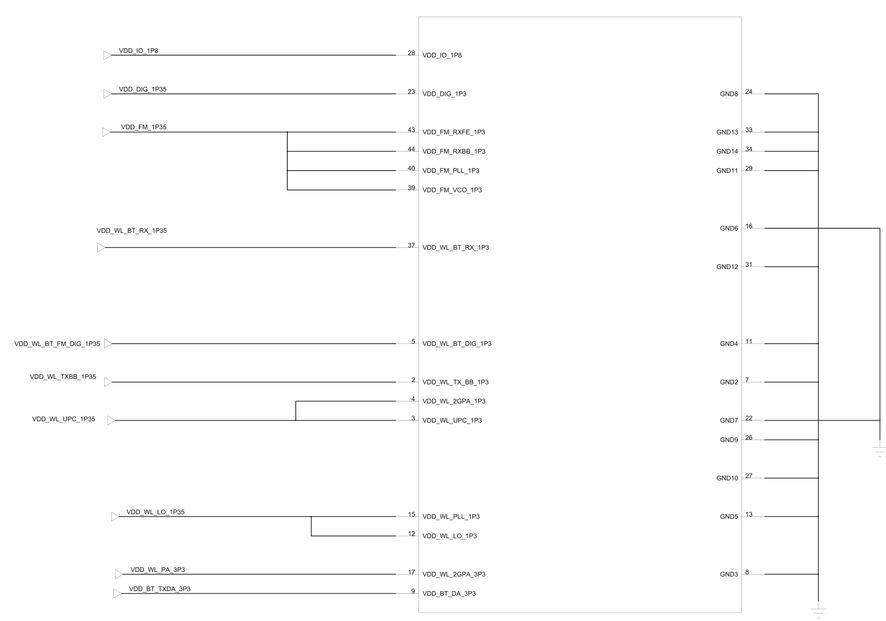

QUALCOMM Incorporated
5775 Morehouse Drive
San Diego, CA 92121-1714
U.S.A.

Title

Size	Name	Rev

Date: Sheet of

GPS

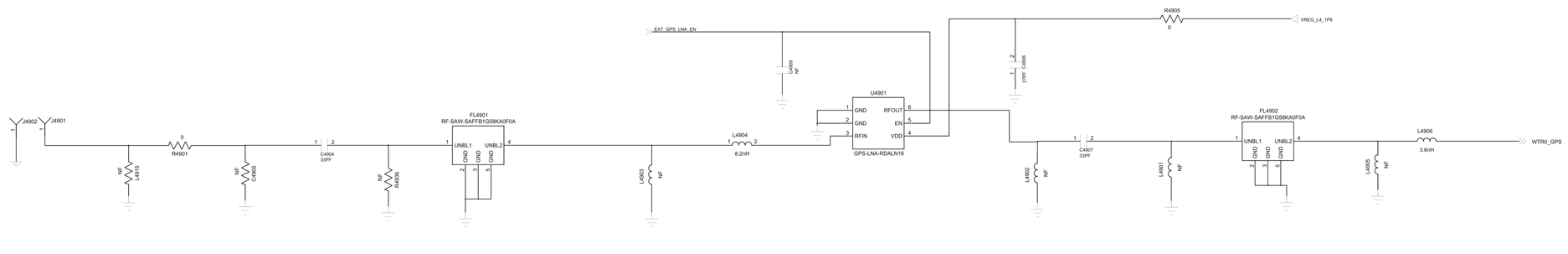

GPS

Title

Size | Name | Rev

Date: | Sheet | of