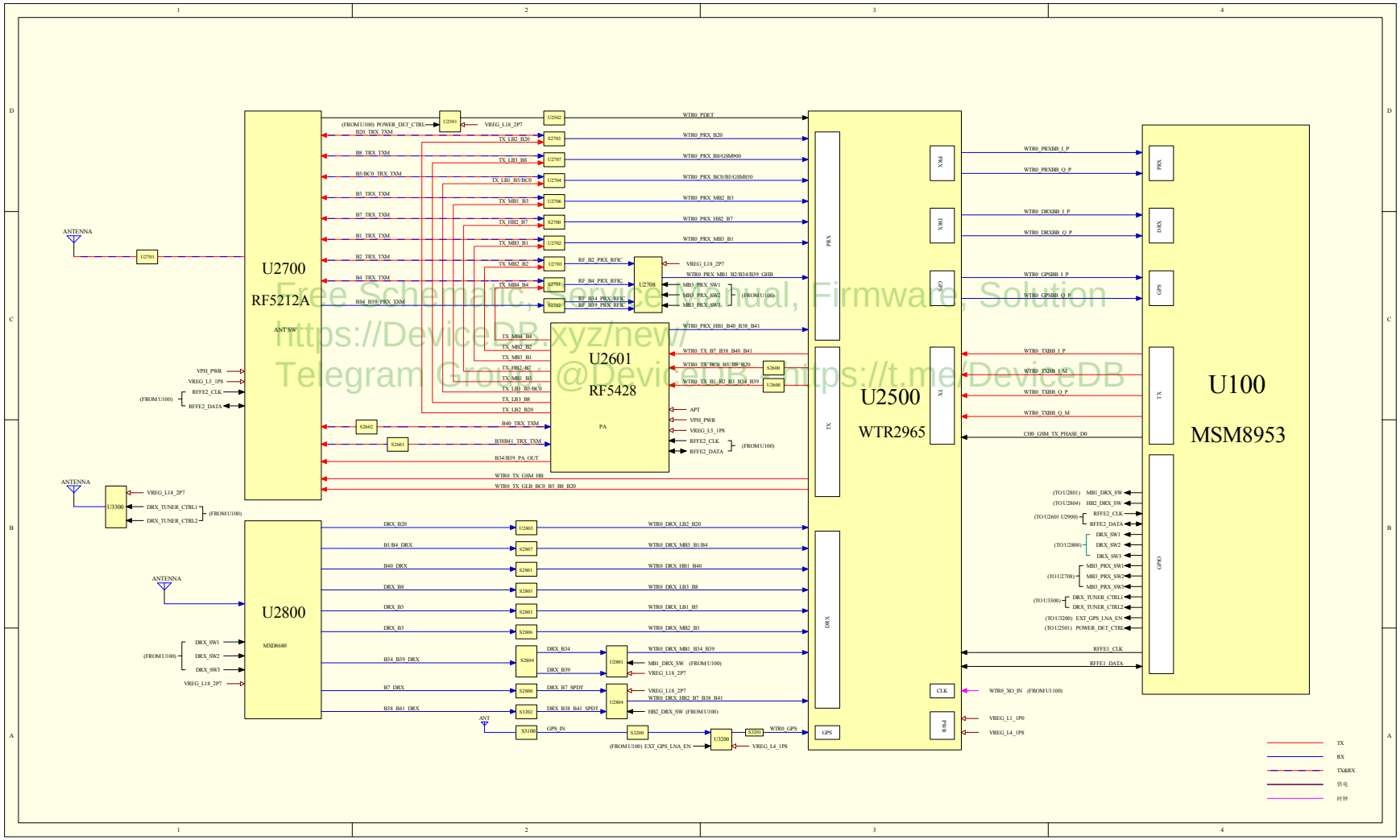


Free Schematic, Service Manual, Firmware, Solution
https://DeviceDB.xyz/new/
Telegram Group: @DeviceDB https://t.me/DeviceDB

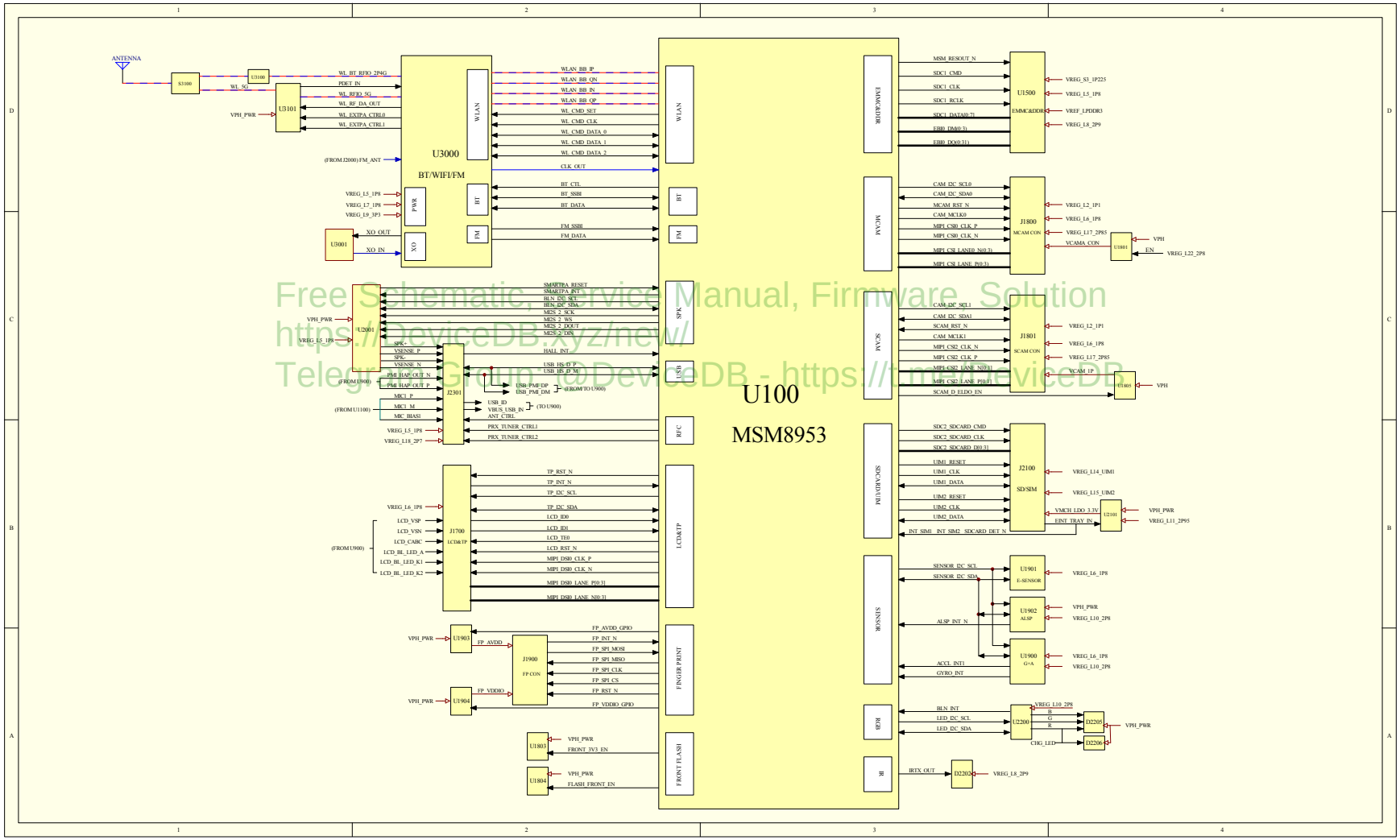


Free Schematic, Service Manual, Firmware, Solution
https://DeviceDB.xyz/new/
Telegram Group: @DeviceDB - https://t.me/DeviceDB

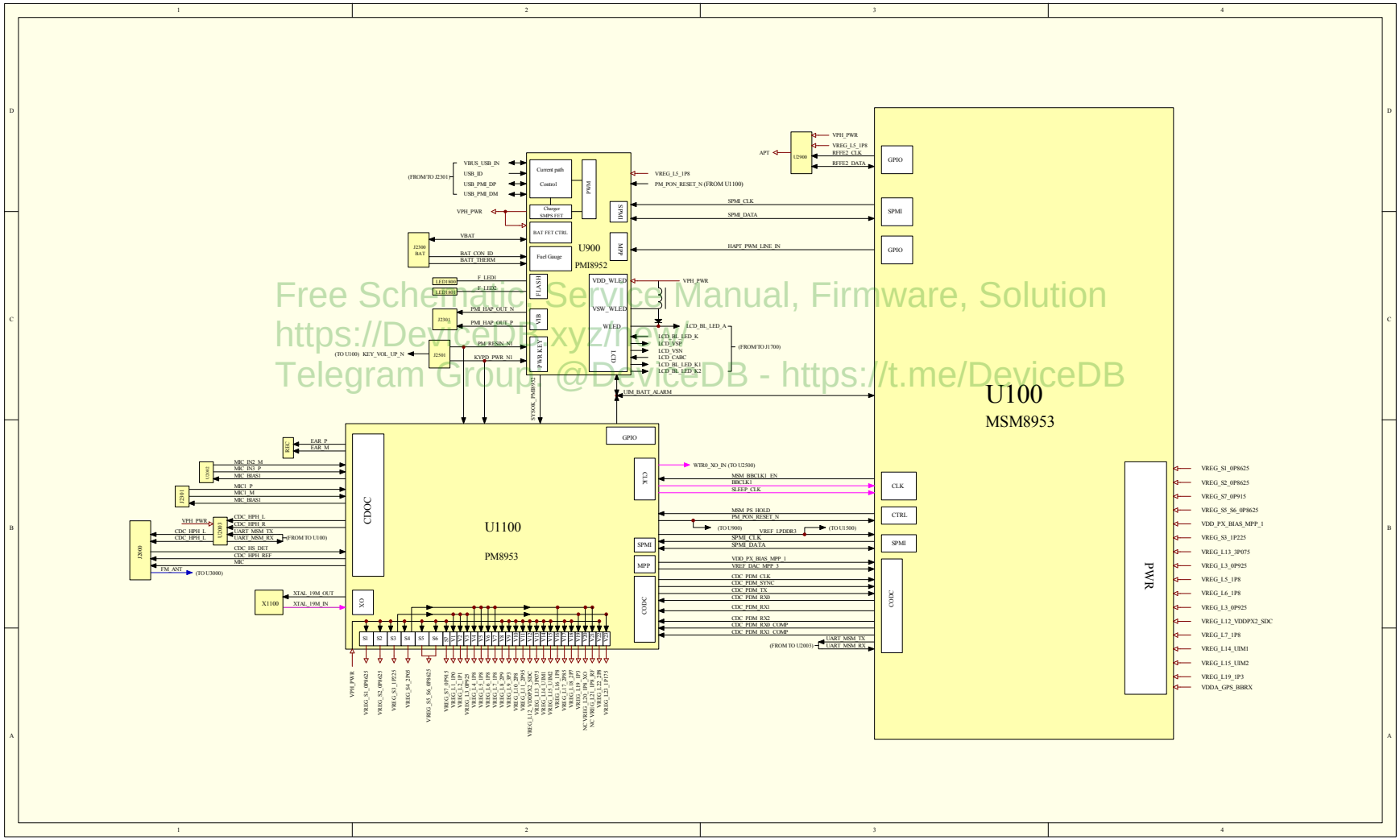


Free Schematic, Service Manual, Firmware, Solution
https://DeviceDB.xyz/ or
Telegram Group @DeviceDB - https://t.me/DeviceDB