1. ALL RESISTANCE VALUES ARE IN OHMS, 0.1 WATT +/- 5%.
2. ALL CAPACITANCE VALUES ARE IN MICROFARADS.
3. ALL CRYSTALS & OSCILLATOR VALUES ARE IN HERTZ.

REV	ECN	DESCRIPTION OF REVISION	APPD / DATE
8	0006400877	ENGINEERING RELEASED	2016-06-14

D10 MLB - DVT

LAST_MODIFICATION=Tue Jun 14 15:20:28 2016

PAGE	<CSA>	CONTENTS	SYNC	DATE
1	<CSA_PAGE1>	TABLE OF CONTENTS	<SYNC_MASTER1>	<SYNC_DATE1>
2	<CSA_PAGE2>	SYSTEM:BOM TABLES	<SYNC_MASTER2>	<SYNC_DATE2>
3	<CSA_PAGE3>	MLB SPECIFIC: BOM TABLE	<SYNC_MASTER3>	<SYNC_DATE3>
4	<CSA_PAGE4>	SYSTEM:MECHANICAL, TESTPOINTS	<SYNC_MASTER4>	<SYNC_DATE4>
5	<CSA_PAGE5>	SYSTEM:BOARDID	<SYNC_MASTER5>	<SYNC_DATE5>
6	<CSA_PAGE6>	spare	<SYNC_MASTER6>	<SYNC_DATE6>
7	<CSA_PAGE7>	SOC:JTAG,USB,XTAL	<SYNC_MASTER7>	<SYNC_DATE7>
8	<CSA_PAGE8>	SOC:PCIE	<SYNC_MASTER8>	<SYNC_DATE8>
9	<CSA_PAGE9>	SOC:MIPI AND ISP	<SYNC_MASTER9>	<SYNC_DATE9>
10	<CSA_PAGE10>	SOC:LPDP	<SYNC_MASTER10>	<SYNC_DATE10>
11	<CSA_PAGE11>	SOC:SERIAL	<SYNC_MASTER11>	<SYNC_DATE11>
12	<CSA_PAGE12>	SOC:GPIO & UART	<SYNC_MASTER12>	<SYNC_DATE12>
13	<CSA_PAGE13>	SOC:AOP	<SYNC_MASTER13>	<SYNC_DATE13>
14	<CSA_PAGE14>	SOC:POWER (1/3)	<SYNC_MASTER14>	<SYNC_DATE14>
15	<CSA_PAGE15>	SOC:POWER (2/3)	<SYNC_MASTER15>	<SYNC_DATE15>
16	<CSA_PAGE16>	SOC:POWER (3/3)	<SYNC_MASTER16>	<SYNC_DATE16>
17	<CSA_PAGE17>	NAND	<SYNC_MASTER17>	<SYNC_DATE17>
18	<CSA_PAGE18>	SYSTEM POWER:PMU (1/3)	<SYNC_MASTER18>	<SYNC_DATE18>
19	<CSA_PAGE19>	SYSTEM POWER:PMU (2/3)	<SYNC_MASTER19>	<SYNC_DATE19>
20	<CSA_PAGE20>	SYSTEM POWER:PMU (3/3)	<SYNC_MASTER20>	<SYNC_DATE20>
21	<CSA_PAGE21>	SYSTEM POWER:CHARGER	<SYNC_MASTER21>	<SYNC_DATE21>
22	<CSA_PAGE22>	SYSTEM POWER:BATTERY CONN	<SYNC_MASTER22>	<SYNC_DATE22>
23	<CSA_PAGE23>	SYSTEM POWER:BOOST	<SYNC_MASTER23>	<SYNC_DATE23>
24	<CSA_PAGE24>	SENSORS	<SYNC_MASTER24>	<SYNC_DATE24>
25	<CSA_PAGE25>	B2B FILTERS: UTAH	<SYNC_MASTER25>	<SYNC_DATE25>
26	<CSA_PAGE26>	CAMERA:STROBE DRIVER	<SYNC_MASTER26>	<SYNC_DATE26>
27	<CSA_PAGE27>	Accessory: Buck Circuit	<SYNC_MASTER27>	<SYNC_DATE27>
28	<CSA_PAGE28>	TRINITY: FF SPECIFIC	<SYNC_MASTER28>	<SYNC_DATE28>
29	<CSA_PAGE29>	B2B:FOREHEAD	<SYNC_MASTER29>	<SYNC_DATE29>
30	<CSA_PAGE30>	spare	<SYNC_MASTER30>	<SYNC_DATE30>
31	<CSA_PAGE31>	AUDIO:CALTRA CODEC (1/2)	<SYNC_MASTER31>	<SYNC_DATE31>
32	<CSA_PAGE32>	AUDIO:CALTRA CODEC (2/2)	<SYNC_MASTER32>	<SYNC_DATE32>
33	<CSA_PAGE33>	AUDIO:SPEAKER AMP 2	<SYNC_MASTER33>	<SYNC_DATE33>
34	<CSA_PAGE34>	AUDIO:SPEAKER AMP 1	<SYNC_MASTER34>	<SYNC_DATE34>
35	<CSA_PAGE35>	ARC:DRIVER	<SYNC_MASTER35>	<SYNC_DATE35>
36	<CSA_PAGE36>	ARC:MAGGIE	<SYNC_MASTER36>	<SYNC_DATE36>
37	<CSA_PAGE37>	DISPLAY & MESA:POWER	<SYNC_MASTER37>	<SYNC_DATE37>
38	<CSA_PAGE38>	B2B:ORB & MESA	<SYNC_MASTER38>	<SYNC_DATE38>
39	<CSA_PAGE39>	B2B FILTERS: DISPLAY & TOUCH	<SYNC_MASTER39>	<SYNC_DATE39>
40	<CSA_PAGE40>	TRISTAR 2	<SYNC_MASTER40>	<SYNC_DATE40>
41	<CSA_PAGE41>	B2B:DOCK FLEX	<SYNC_MASTER41>	<SYNC_DATE41>
42	<CSA_PAGE42>	spare	<SYNC_MASTER42>	<SYNC_DATE42>
43	<CSA_PAGE43>	spare	<SYNC_MASTER43>	<SYNC_DATE43>
44	<CSA_PAGE44>	B2B FILTERS: RIGHT BUTTON FLEX	<SYNC_MASTER44>	<SYNC_DATE44>
45	<CSA_PAGE45>	B2B: SMALL FF SPECIFIC	<SYNC_MASTER45>	<SYNC_DATE45>

PAGE	<CSA>	CONTENTS	SYNC	DATE
46	<CSA_PAGE46>	SMALL FORM FACTOR SPECIFIC	<SYNC_MASTER46>	<SYNC_DATE46>
47	<CSA_PAGE47>	I2C MAP: AP, TOUCH, HOMER, I2C5	<SYNC_MASTER47>	<SYNC_DATE47>
48	<CSA_PAGE48>	I2C MAP AOP	<SYNC_MASTER48>	<SYNC_DATE48>
49	<CSA_PAGE49>	I2C TABLE	<SYNC_MASTER49>	<SYNC_DATE49>
50	<CSA_PAGE50>	spare	<SYNC_MASTER50>	<SYNC_DATE50>
51	<CSA_PAGE51>	spare	<SYNC_MASTER51>	<SYNC_DATE51>
52	<CSA_PAGE52>	MLB UNIQUE	<SYNC_MASTER52>	<SYNC_DATE52>
53	<CSA_PAGE53>	CELL,WIFI,NFC	<SYNC_MASTER53>	<SYNC_DATE53>
54	<CSA_PAGE54>	WIFI_MLB SCHEMATIC	<SYNC_MASTER54>	<SYNC_DATE54>
55	<CSA_PAGE55>	PERENNIAL	<SYNC_MASTER55>	<SYNC_DATE55>
56	<CSA_PAGE56>	WIFI FRONT-END [77]	<SYNC_MASTER56>	<SYNC_DATE56>
57	<CSA_PAGE57>	page1	<SYNC_MASTER57>	<SYNC_DATE57>
58	<CSA_PAGE58>	NFC	<SYNC_MASTER58>	<SYNC_DATE58>
59	<CSA_PAGE59>	page1 [1]	<SYNC_MASTER59>	<SYNC_DATE59>
60	<CSA_PAGE60>	UAT MATCH AND TUNER CONNECTOR [2]	<SYNC_MASTER60>	<SYNC_DATE60>
61	<CSA_PAGE61>	BOM LIST	<SYNC_MASTER61>	<SYNC_DATE61>
62	<CSA_PAGE62>	page1	<SYNC_MASTER62>	<SYNC_DATE62>
63	<CSA_PAGE63>	BOM_OMIT_TABLE	<SYNC_MASTER63>	<SYNC_DATE63>
64	<CSA_PAGE64>	PMU: CONTROL AND CLOCKS	<SYNC_MASTER64>	<SYNC_DATE64>
65	<CSA_PAGE65>	PMU: SWITCHERS AND LDOS	<SYNC_MASTER65>	<SYNC_DATE65>
66	<CSA_PAGE66>	BASEBAND: POWER2	<SYNC_MASTER66>	<SYNC_DATE66>
67	<CSA_PAGE67>	BASEBAND: CONTROL	<SYNC_MASTER67>	<SYNC_DATE67>
68	<CSA_PAGE68>	BASEBAND GPIOS	<SYNC_MASTER68>	<SYNC_DATE68>
69	<CSA_PAGE69>	TRANSCEIVER0/1: POWER	<SYNC_MASTER69>	<SYNC_DATE69>
70	<CSA_PAGE70>	TRANSCEIVER0/1: TX PORTS	<SYNC_MASTER70>	<SYNC_DATE70>
71	<CSA_PAGE71>	TRANSCEIVER0/1: PRX PORTS	<SYNC_MASTER71>	<SYNC_DATE71>
72	<CSA_PAGE72>	RECEIVE MATCHING	<SYNC_MASTER72>	<SYNC_DATE72>
73	<CSA_PAGE73>	LOWER ANTENNA & COUPLERS	<SYNC_MASTER73>	<SYNC_DATE73>
74	<CSA_PAGE74>	DIVERSITY RECEIVE ASM'S	<SYNC_MASTER74>	<SYNC_DATE74>
75	<CSA_PAGE75>	DIVERSITY RECEIVE LNA'S	<SYNC_MASTER75>	<SYNC_DATE75>
76	<CSA_PAGE76>	UPPER ANTENNA FEEDS	<SYNC_MASTER76>	<SYNC_DATE76>
77	<CSA_PAGE77>	PMU: ET MODULATOR	<SYNC_MASTER77>	<SYNC_DATE77>
78	<CSA_PAGE78>	TEST POINTS & BOOT CONFIG	<SYNC_MASTER78>	<SYNC_DATE78>
79	<CSA_PAGE79>	TDD TRANSMIT	<SYNC_MASTER79>	<SYNC_DATE79>
80	<CSA_PAGE80>	FDD TRANSMIT	<SYNC_MASTER80>	<SYNC_DATE80>
81	<CSA_PAGE81>	ICEFALL, SIM, DEBUG_CONN	<SYNC_MASTER81>	<SYNC_DATE81>
	<CSA_PAGE82>		<SYNC_MASTER82>	<SYNC_DATE82>
	<CSA_PAGE83>		<SYNC_MASTER83>	<SYNC_DATE83>
	<CSA_PAGE84>		<SYNC_MASTER84>	<SYNC_DATE84>
	<CSA_PAGE85>		<SYNC_MASTER85>	<SYNC_DATE85>
	<CSA_PAGE86>		<SYNC_MASTER86>	<SYNC_DATE86>
	<CSA_PAGE87>		<SYNC_MASTER87>	<SYNC_DATE87>
	<CSA_PAGE88>		<SYNC_MASTER88>	<SYNC_DATE88>
	<CSA_PAGE89>		<SYNC_MASTER89>	<SYNC_DATE89>
	<CSA_PAGE90>		<SYNC_MASTER90>	<SYNC_DATE90>

TABLE OF CONTENTS

Schematic & PCB Callouts

PART#	QTY	DESCRIPTION	REFERENCE DESIGNATOR(S)	CRITICAL	BOM OPTION
051-00419	1	SCH,MLB,D10	SCH	CRITICAL	?
820-00188	1	PCBF,MLB,D10	PCB	CRITICAL	?

System Block Diagram:

<rdar://problem/16684269>

SCH 051-00419
BRD 820-00188
MCO 056-01342

by kass

NAND BOM Options

PART#	QTY	DESCRIPTION	REFERENCE DESIGNATOR(S)	CRITICAL	BOM OPTION
335S00169	1	NAND,H,32GB,16nm,MLC	U1701	CRITICAL	NAND_32G
335S00182	1	NAND,H,128GB,16nm,TLC	U1701	CRITICAL	NAND_128G
335S00156	1	NAND,H,256GB,3Dv3,TLC	U1701	CRITICAL	NAND_256G
138S0867	5	CAP,X5R,150F,20%,6.3V,0.45MM,0805,1402	C1748,C1732,C1716,C1721,C1733	CRITICAL	NAND_32G
138S00003	5	CAP,X5R,150F,20%,6.3V,0.45MM,0805,1402	C1748,C1732,C1716,C1721,C1733	CRITICAL	NAND_128G
138S00003	5	CAP,X5R,150F,20%,6.3V,0.45MM,0805,1402	C1748,C1732,C1716,C1721,C1733	CRITICAL	NAND_256G

PART NUMBER	ALTERNATE FOR PART NUMBER	BOM OPTION	REF DES	COMMENTS:
335S00201	335S00169	ALTERNATE	U1701	T,15nm,MLC,32GB
335S00209	335S00169	ALTERNATE	U1701	S,16nm,MLC,32GB
335S00195	335S00182	ALTERNATE	U1701	SS,1Ynm,TLC,128GB
335S00180	335S00182	ALTERNATE	U1701	T,15nm,TLC,128GB
335S00179	335S00182	ALTERNATE	U1701	SD,15nm,TLC,128GB
335S00148	335S00183	ALTERNATE	U1701	SD,3Dv2,TLC,256GB
335S00190	335S00183	ALTERNATE	U1701	SS,3Dv3,TLC,256GB

#22686038:See Radar

Magnesium Alternates

PART NUMBER	ALTERNATE FOR PART NUMBER	BOM OPTION	REF DES	COMMENTS:
338S00173	338S00203	ALTERNATE	U2402	Largan Wafer (LPF Film) Magnesium

Carbon Alternates

PART NUMBER	ALTERNATE FOR PART NUMBER	BOM OPTION	REF DES	COMMENTS:
338S00087	338S00226	ALTERNATE	U2401,U2404	Updated revision of Carbon

UT LDO Alternates

PART NUMBER	ALTERNATE FOR PART NUMBER	BOM OPTION	REF DES	COMMENTS:
353S00889	353S00015	ALTERNATE	U2501	ST, LCC 6ES, 2.525V, CAP 0.45x0.45

Mamba LDO Alternates

PART NUMBER	ALTERNATE FOR PART NUMBER	BOM OPTION	REF DES	COMMENTS:
353S00932	353S00576	ALTERNATE	U3801	TI, LCC 6ES, 2.5V

I2C5 Alternate

PART NUMBER	ALTERNATE FOR PART NUMBER	BOM OPTION	REF DES	COMMENTS:
335S00234	335S00233	ALTERNATE	U1101	100% SLG58669V

Active Diode Alternate

PART NUMBER	ALTERNATE FOR PART NUMBER	BOM OPTION	REF DES	COMMENTS:
376S00106	376S00047	ALTERNATE	Q2101	DIODES INC. ACT DIODE

DDR PLL Alternate

PART NUMBER	ALTERNATE FOR PART NUMBER	BOM OPTION	REF DES	COMMENTS:
155S00095	155S00068	ALTERNATE	FL1501	FERR 90,600MA 15A, 100A,120A,1405

Power Inductor Alternates

PART NUMBER	ALTERNATE FOR PART NUMBER	BOM OPTION	REF DES	COMMENTS:	
152S00118	152S00075	ALTERNATE	ALL	IND,PWR,0512,1.1 UH,3.0A,0.040 OHM,2016	
152S00077	152S00397	ALTERNATE	ALL	IND,PWR,0818,1.0 UH,11.25A,0.13M OHM,2016	updated 11/12
152S00121	152S00081	ALTERNATE	ALL	IND,PWR,0818,0.47 UH,9.8A,0.01M OHM,2012	
152S00123	152S1936	ALTERNATE	ALL	IND,PWR,0818,IT 1R0,7.72A,0.05M OHM,3225	
152S00402	152S00366	ALTERNATE	ALL	IND,0517,33N,3.1A,0.33 OHM,1613	updated 11/12
152S00297	152S1843	ALTERNATE	ALL	2520C 2012 -3R	reverted 11/13
152S00365	152S00297	ALTERNATE	ALL	2520C 2012 -3R	
152S00398	152S00204	ALTERNATE	ALL	IND,PWR,1.22UH,20%,9.7A,0.09OHM,2016	For Chestnut inductor; so it doesn't interfere with PMU inducotr Buck 7 alts
152S00120	152S00077	ALTERNATE	ALL	PIC Chestnut 2520x252 -3R2U	Except HOCKS LE (HOCKS LE is Taiyo only)
152S00117	152S00074	ALTERNATE	ALL	IND,PWR,0512,1.0 UH,3.0A,0.04 OHM,2016	

Global R/C Alternates

PART NUMBER	ALTERNATE FOR PART NUMBER	BOM OPTION	REF DES	COMMENTS:
118S0764	118S0717	ALTERNATE	ALL	RES, 5.76K, 0.1%, 0201
138S0702	138S0657	ALTERNATE	ALL	CAP, X5R, 4.7UF, 6V, 0402
138S00006	138S0835	ALTERNATE	ALL	CAP, 5-TERM, 4.7UF, 6V, 0402
138S00005	138S00003	ALTERNATE	ALL	CAP,X5R,THIN,4.7U,6.45MM,0402,6V/6V
138S00048	138S00003	ALTERNATE	ALL	CAP,X5R,STMP,4.7U,6.45MM,0402,6V/6V
138S0648	138S0652	ALTERNATE	ALL	CAP,X5R,4.7UF,6.3V,0.45MM,0402,6V/6V
132S0400	132S0436	ALTERNATE	ALL	CAP,X5R,2.2UF,6.3V,0.2MM,0504
138S00024	138S0986	ALTERNATE	ALL	CAP,TA,7343,7.3X7.3X4.0,1R5/35V/TIM
138S0706	138S0739	ALTERNATE	ALL	CAP,CER,X5F,22U,10V,20%,0201,0504EN
138S0945	138S0739	ALTERNATE	ALL	CAP,CER,X5F,22U,10V,20%,0201,0504EN
132S0436	132S0400	ALTERNATE	ALL	CAP,CER,X5R,4.2X2P,20%,6.3V,0201

Global Ferrite Alternates

PART NUMBER	ALTERNATE FOR PART NUMBER	BOM OPTION	REF DES	COMMENTS:
155S00067	155S0581	ALTERNATE	ALL	FERR, 240OHM, 0.3ROHM DCR, 0201
155S0581	155S00067	ALTERNATE	ALL	FERR, 240OHM, 0.3ROHM DCR, 0201
155S00012	155S00168	ALTERNATE	ALL	FLTR, 65 OHM, 0603
155S00194	155S0610	ALTERNATE	ALL	FERR 80, 1500M, TDK
155S00200	155S0610	ALTERNATE	ALL	FERR 80, 1500M, TT
152S00489	152S00456	ALTERNATE	ALL	FERR 80, 3.47M, TT

Global Varistor Alternates

PART NUMBER	ALTERNATE FOR PART NUMBER	BOM OPTION	REF DES	COMMENTS:
377S0168	377S0140	ALTERNATE	ALL	VARISTOR, 6.8V, 1210F, 0805

ACC BUCK CIRCUIT Alternates

PART NUMBER	ALTERNATE FOR PART NUMBER	BOM OPTION	REF DES	COMMENTS:
371S00087	371S00064	ALTERNATE	D2700	DIODE,SHOTTKY,30V,200MA,0201
152S00558	152S00557	ALTERNATE	L2700	IND,MLD,0.47UH,2.5A,80MOHM,1008
376S00166	376S00164	ALTERNATE	Q2700,Q2701	FET,12V,CSP4
353S01007	353S01039	ALTERNATE	U2710	IC,LOAD SWITCH,WLCSP4

by kass

D10 EEEE CALLOUTS

PART#	QTY	DESCRIPTION	REFERENCE DESIGNATOR(S)	CRITICAL	BOM OPTION
825-6838	1	EEEE CODE FOR 639-01754	EEEE_GXD5	CRITICAL	EEEE_BEST
825-6838	1	EEEE CODE FOR 639-01755	EEEE_GXD6	CRITICAL	EEEE_SUPREME
825-6838	1	EEEE CODE FOR 639-01756	EEEE_GXD7	CRITICAL	EEEE_EXTREME
825-6838	1	EEEE CODE FOR 639-02372	EEEE_H67F	CRITICAL	EEEE_BEST_ROW
825-6838	1	EEEE CODE FOR 639-02373	EEEE_H67G	CRITICAL	EEEE_SUPREME_ROW
825-6838	1	EEEE CODE FOR 639-02374	EEEE_H67H	CRITICAL	EEEE_EXTREME_ROW

CAYMAN DDR Alternates

PART NUMBER	ALTERNATE FOR PART NUMBER	BOM OPTION	REF DES	COMMENTS:
339S00254	339S00253	ALTERNATE	ALL	DDR-H, 2G, B1
339S00255	339S00253	ALTERNATE	ALL	DDR-8, 2G, B1

Cap 2.2UF Alternates

PART NUMBER	ALTERNATE FOR PART NUMBER	BOM OPTION	REF DES	COMMENTS:
138S00049	138S00032	ALTERNATE	(C2507,C2531)	(C2507,C2531)
138S0831	138S00032	ALTERNATE	ALL	C2F,CES,ECS,C,2CF,C1C,2,2C,C1S,ESCCS

#256347TR: Exclude Kyocera as 2.2UF alt at only C2507/C2531 REFDES (other refdes no impact)

D10x Specific BOM Callouts

PART#	QTY	DESCRIPTION	REFERENCE DESIGNATOR(S)	CRITICAL	BOM OPTION
152S00117	1	TA150,SMD,PWR,SHLD,20H,3.6A,6.0x5mm,2016	L1803	CRITICAL	BSLK_TAIYO
11760156	2	RES,MF,1K OHM, 5%, 1/32W, 01005	R4808,R4809	CRITICAL	UTAM_C

#24681501

#24629229

by kass

Current as of D10 MCO 056-01342-78

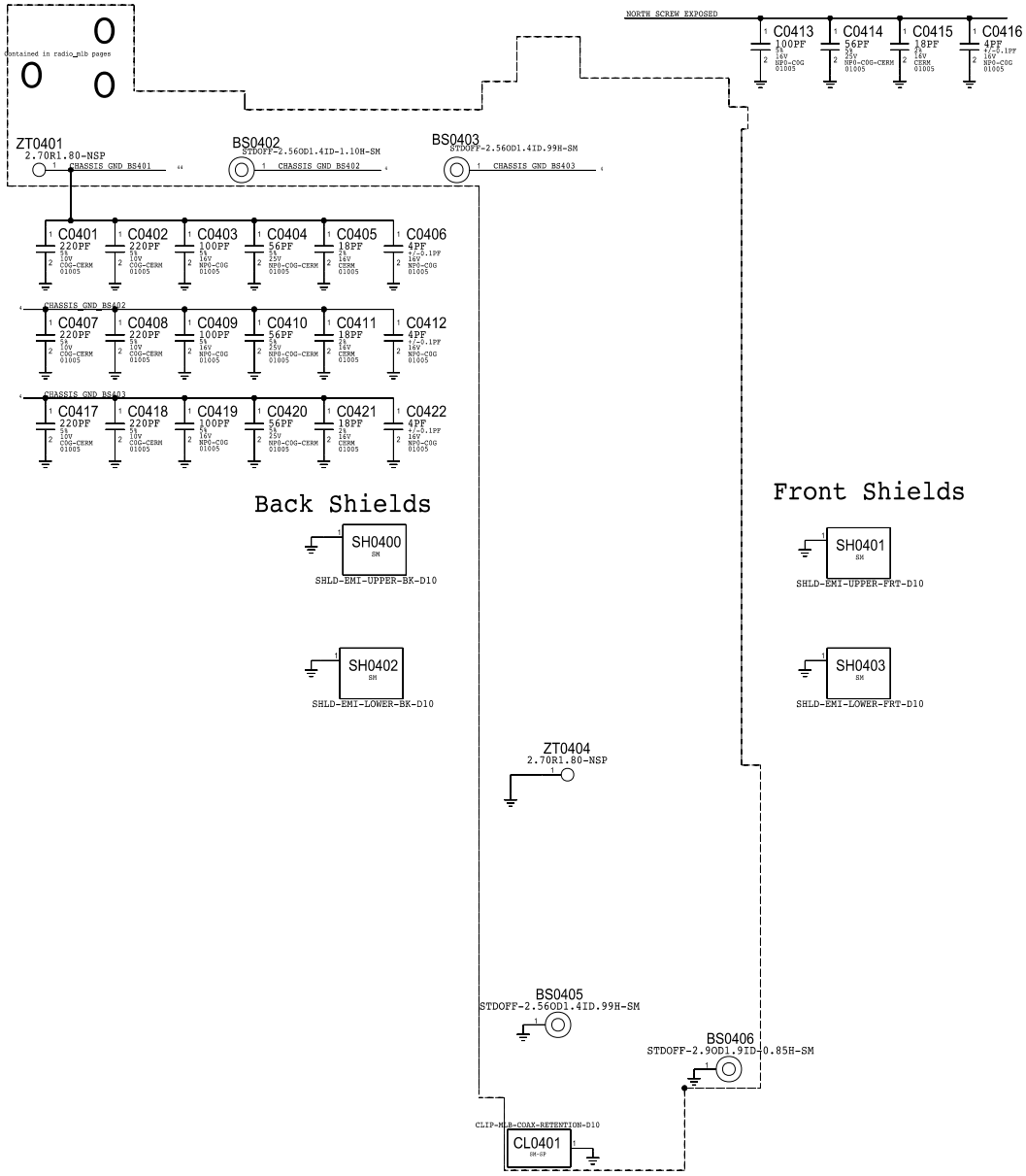

TOP SIDE

TESTPOINTS

POWER

- TP0420 — POWER GROUND
- PP5V0_USB → TP0421 — VBUS
- PP_BATT_VCC → TP0415, TP0422 — VBATT
- PP_VDD_MAIN → TP0408 — VDD_MAIN — Note: Fiducial used as test point
- FD0408 FID 0P5SM1P0SQ-NSP ROOM=TEST
- TP0419, TP0424
- FD0400 FID 0P5SQ-SMP3SQ-NSP ROOM=TEST — GND TP

DFU

- PMU_TO_AP_FORCE_DFU → TP0414 — FORCE DFU

E75

- 90_TRISTAR_DP1_CONN_P → TP0402
- 90_TRISTAR_DP1_CONN_N → TP0403
- 90_TRISTAR_DP2_CONN_P → TP0404
- 90_TRISTAR_DP2_CONN_N → TP0405
- PP_TRISTAR_ACC1 → TP0406 — ACCESSORY ID AND POWER
- PP_TRISTAR_ACC2 → TP0407
- TP0416 — TP IS TO HELP WITH USB SI IN THE FACTORY FIXTURE.
- TRISTAR_CON_DETECT_L → TP0412 — FOR DIAGS

AMUX

- PMU_AMUX_AY → TP0413 — ANALOG MUX A OUTPUT
- R0413 200K 1% 1/32W MF 01005 #25244799 100k to 200k
- PMU_AMUX_BY → TP0423 — ANALOG MUX B OUTPUT

MOJAVE

- MESA_TO_BOOST_EN → TP0400
- PP16V0_MESA → TP0401

LCM

- PP_LCM_BL_CAT1_CONN → TP0409 — LCM BACKLIGHT SINK1
- PP_LCM_BL_CAT2_CONN → TP0410 — LCM BACKLIGHT SINK2
- PP_LCM_BL_ANODE_CONN → TP0411 — LCM BACKLIGHT SOURCE

FIDUCIALS

- FD0410 FID 0P5SM1P0SQ-NSP ROOM=ASSEMBLY
- FD0409 FID 0P5SM1P0SQ-NSP ROOM=ASSEMBLY
- FD0405 FID 0P5SM1P0SQ-NSP ROOM=ASSEMBLY
- FD0406 FID 0P5SQ-SMP3SQ-NSP ROOM=ASSEMBLY
- FD0404 FID 0P5SQ-SMP3SQ-NSP ROOM=ASSEMBLY
- FD0403 FID 0P5SQ-SMP3SQ-NSP ROOM=ASSEMBLY
- FD0402 FID 0P5SQ-SMP3SQ-NSP ROOM=ASSEMBLY
- FD0407 FID 0P5SM1P0SQ-NSP ROOM=TEST

by kass

BOOTSTRAPPING:BOARD REV
BOARD ID
BOOT CONFIG

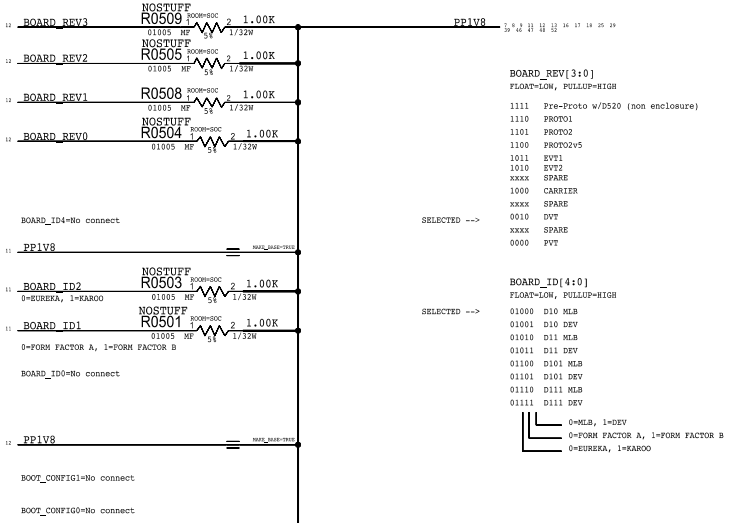

BOARD_REV[3:0]
FLOAT=LOW, PULLUP=HIGH

	1111	Pre-Proto w/D520 (non enclosure)
	1110	PROTO1
	1101	PROTO2
	1100	PROTO2v5
	1011	EVT1
	1010	EVT2
	xxxx	SPARE
	1000	CARRIER
	xxxx	SPARE
SELECTED -->	0010	DVT
	xxxx	SPARE
	0000	PVT

BOARD_ID[4:0]
FLOAT=LOW, PULLUP=HIGH

SELECTED -->	01000	D10 MLB
	01001	D10 DEV
	01010	D11 MLB
	01011	D11 DEV
	01100	D101 MLB
	01101	D101 DEV
	01110	D111 MLB
	01111	D111 DEV

0=MLB, 1=DEV
0=FORM FACTOR A, 1=FORM FACTOR B
0=EUREKA, 1=KAROO

BOOT_CONFIG[2:0]
FLOAT=LOW, PULLUP=HIGH

	000	SPI0
	001	SPI0 TEST MODE
	010	NVME0_X2
	011	NVME0 X2 TEST
SELECTED -->	100	NVME0 X1
	101	NVME0 X1 TEST
	110	SLOW SPI0 TEST
	111	FAST SPI0 TEST

by kass

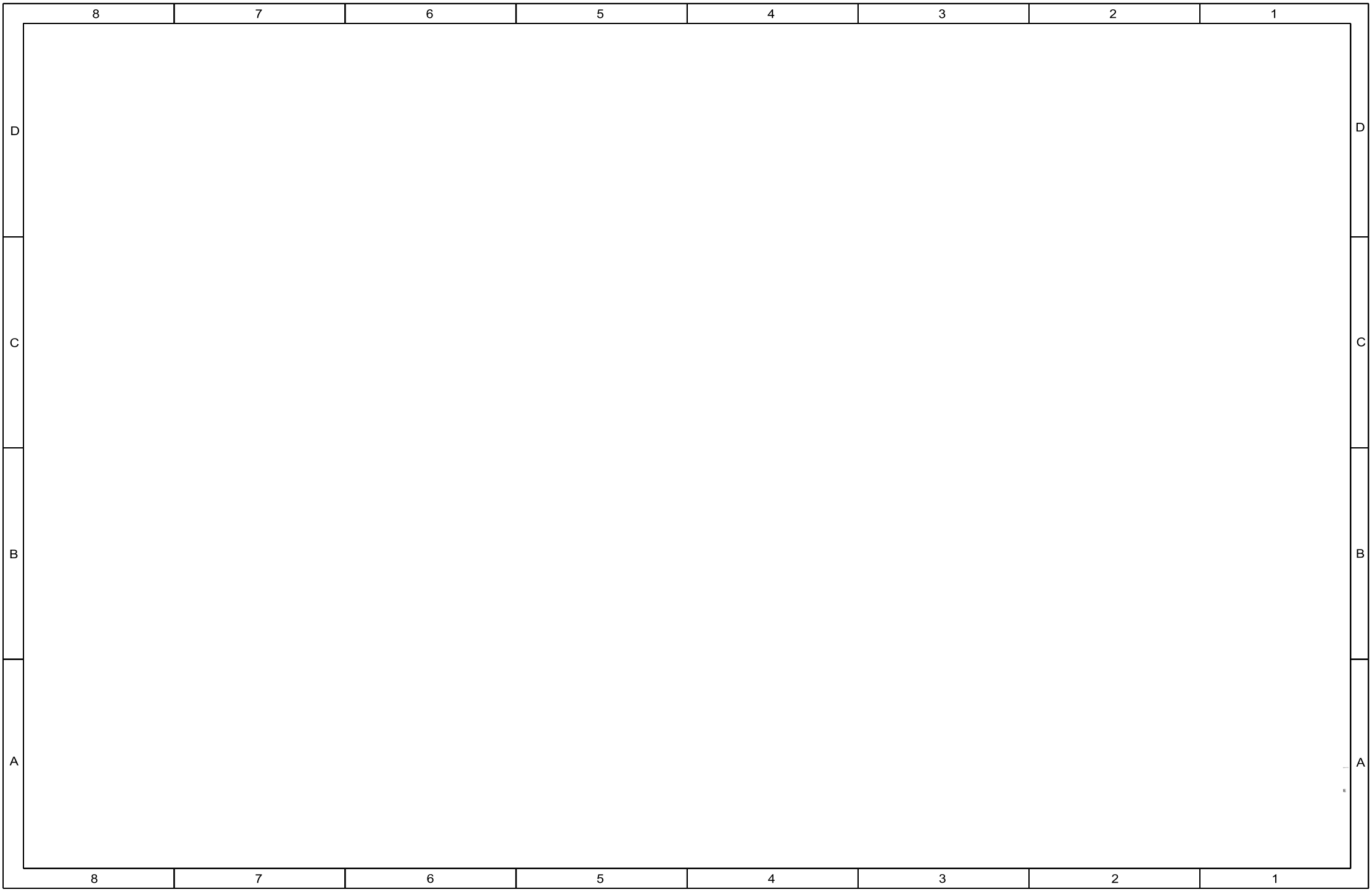

by kass

SOC - USB, JTAG, XTAL

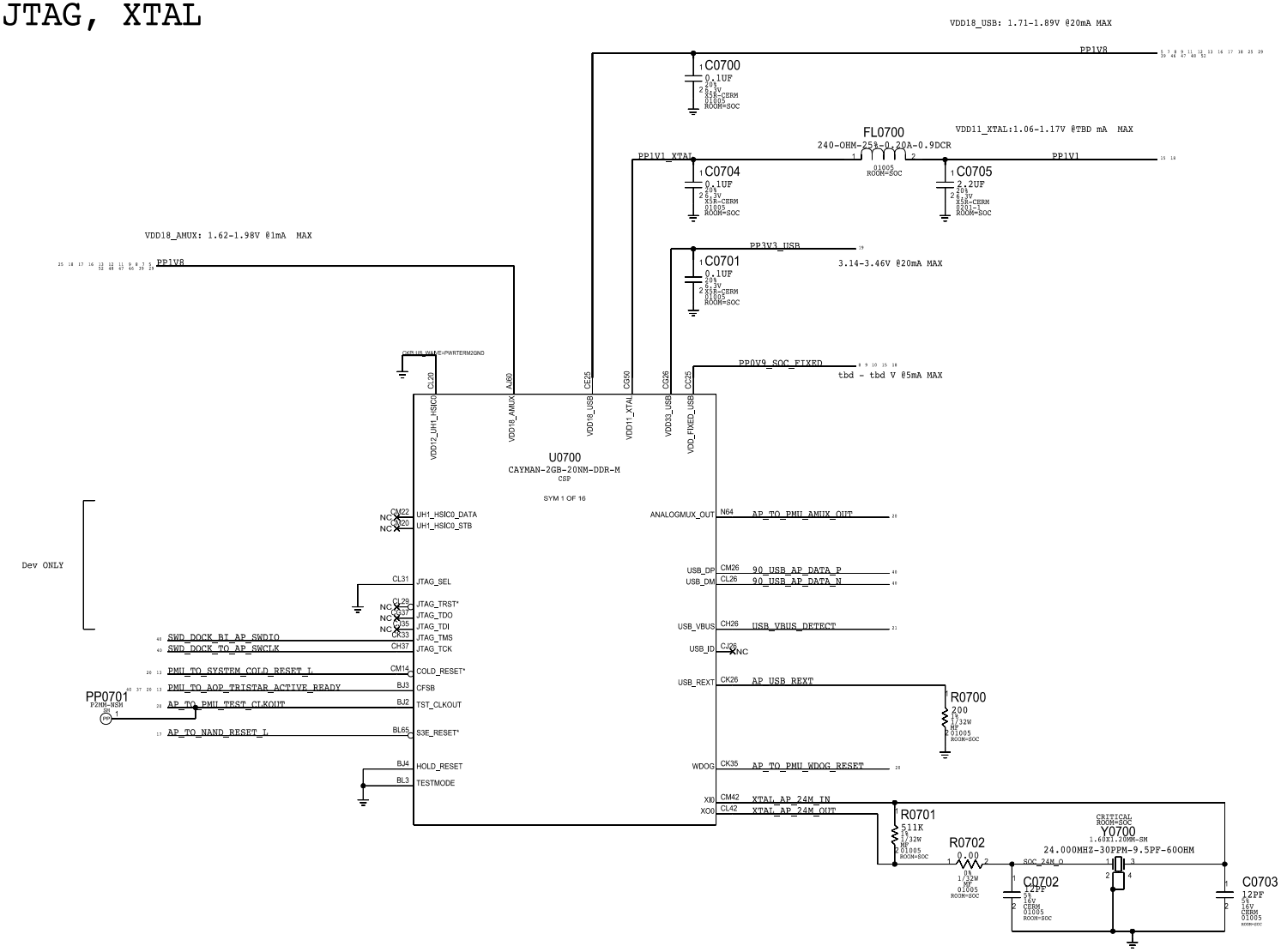

by kass

SOC - PCIE INTERFACES

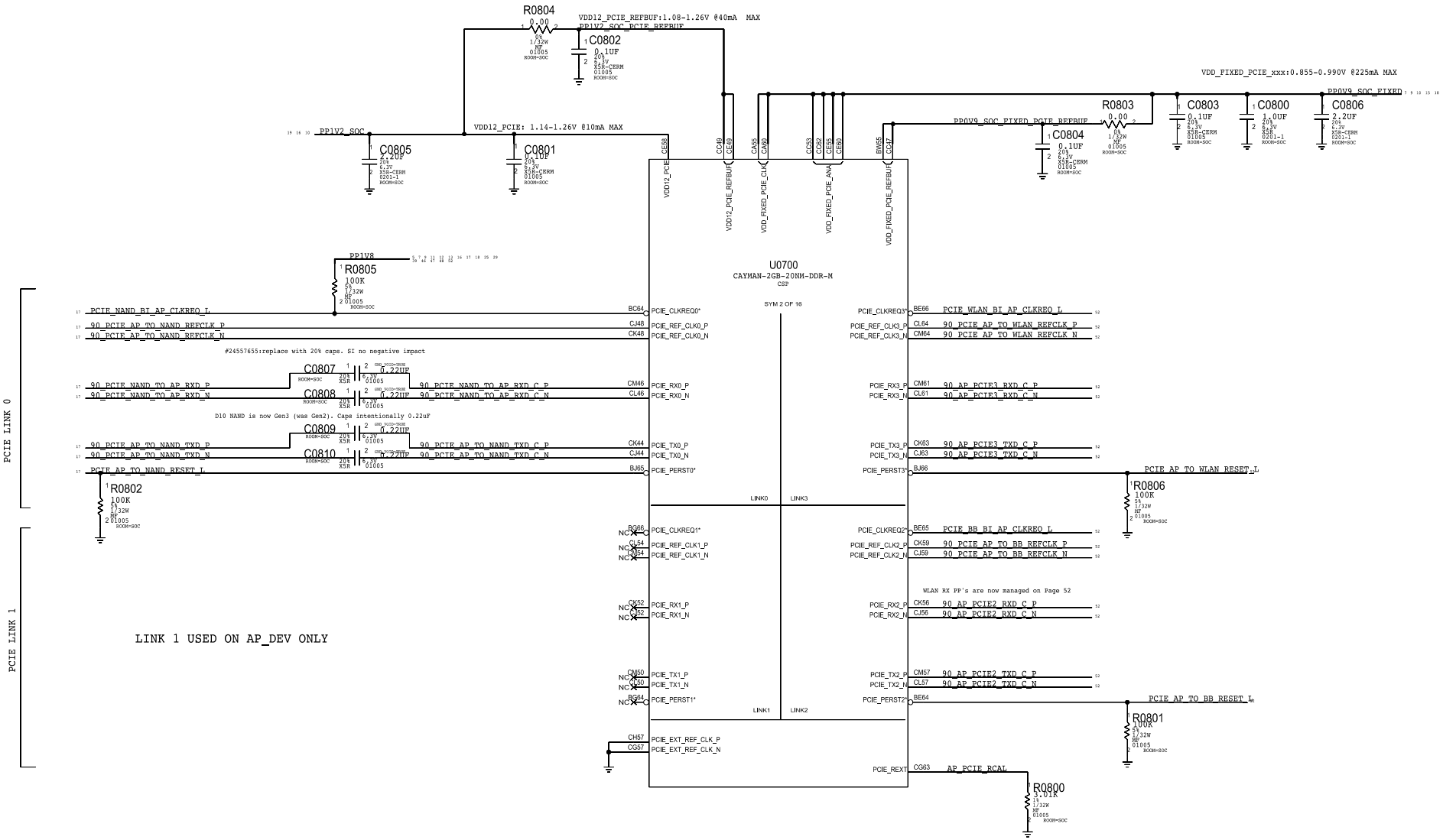

by kass

SOC - MIPI & ISP INTERFACES

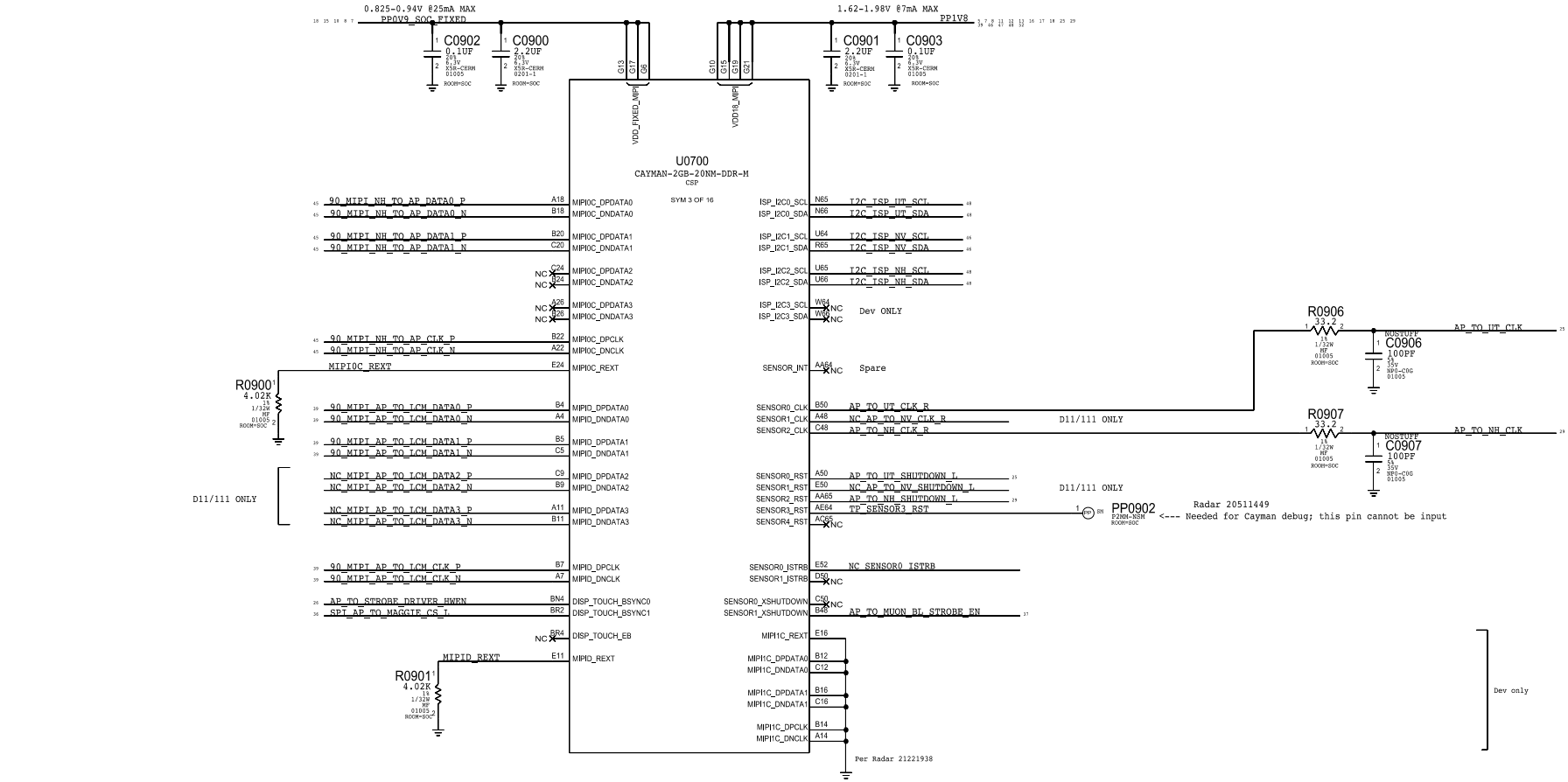

by kass

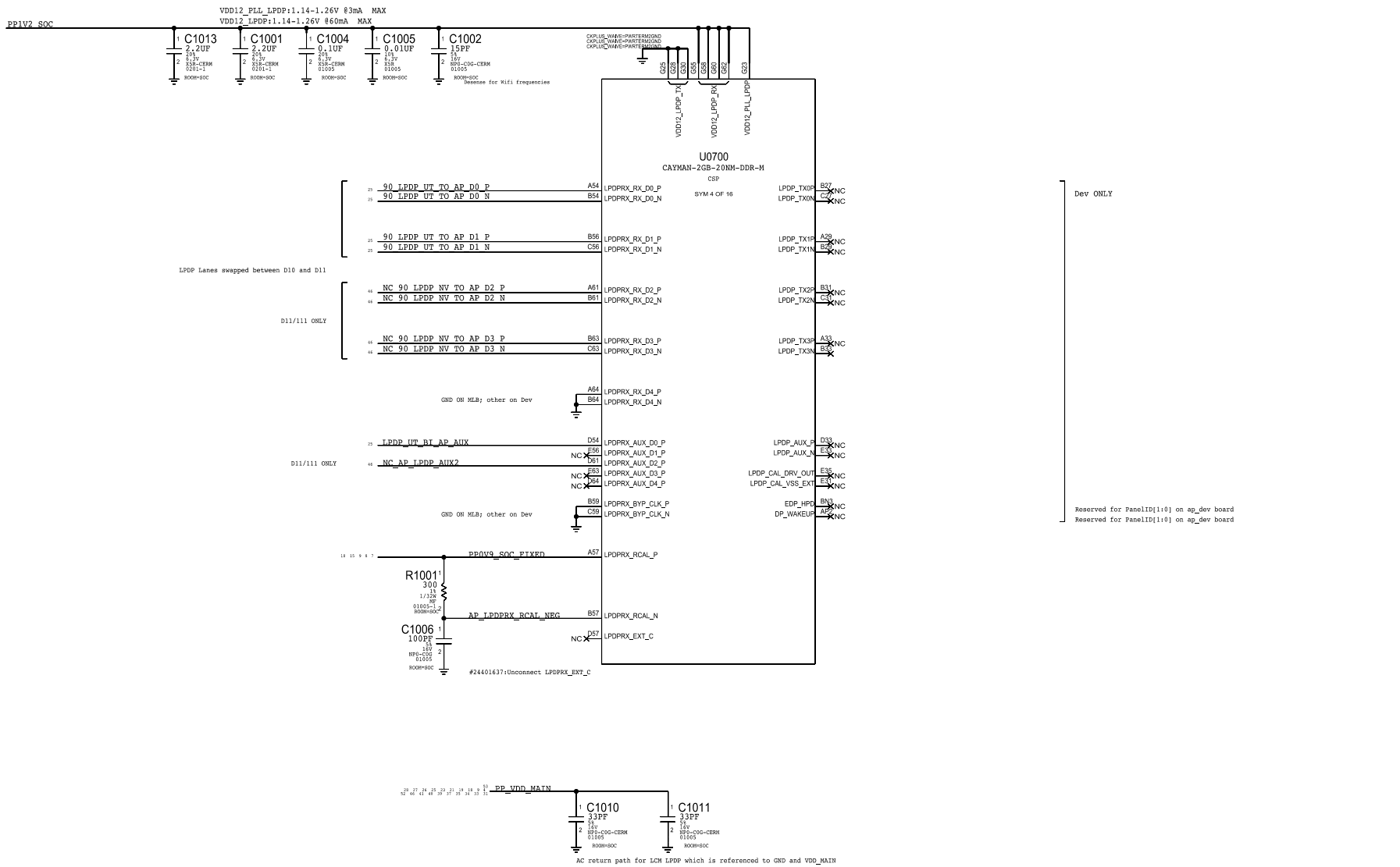
VDD12_PLL_LPDP:1.14-1.26V 83mA MAX
VDD12_LPDP:1.14-1.26V @60mA MAX
PP1V2_SOC
C1013 2.2UF
C1001 2.2UF
C1004 0.1UF
C1005 0.01UF
C1002 15PF
Decease for Wifi frequencies
CKPLUS_VAMP=PARTERMGND
CKPLUS_VAMP=PARTERMGND
CKPLUS_VAMP=PARTERMGND
G25 G26 G54 G55 G58 G60 G62 G23
VDD12_LPDP_TX
VDD12_LPDP_RX
VDD12_PLL_LPDP
U0700
CAYMAN-2GB-20NM-DDR-M
CSP
SYM 4 OF 16
90_LPDP_UT_TO_AP_D0_P
90_LPDP_UT_TO_AP_D0_N
90_LPDP_UT_TO_AP_D1_P
90_LPDP_UT_TO_AP_D1_N
LPDP Lanes swapped between D10 and D11
NC_90_LPDP_NV_TO_AP_D2_P
NC_90_LPDP_NV_TO_AP_D2_N
D11/111 ONLY
NC_90_LPDP_NV_TO_AP_D3_P
NC_90_LPDP_NV_TO_AP_D3_N
GND ON MLB; other on Dev
LPDP_UT_BI_AP_AUX
D11/111 ONLY
NC_AP_LPDP_AUX2
GND ON MLB; other on Dev
PP0V9_SOC_FIXED
R1001 300
AP_LPDPRX_RCAL_NEG
C1006 100PF
#24401637:Unconnect LPDPRX_EXT_C
LPDPRX_RX_D0_P
LPDPRX_RX_D0_N
LPDPRX_RX_D1_P
LPDPRX_RX_D1_N
LPDPRX_RX_D2_P
LPDPRX_RX_D2_N
LPDPRX_RX_D3_P
LPDPRX_RX_D3_N
LPDPRX_RX_D4_P
LPDPRX_RX_D4_N
LPDPRX_AUX_D0_P
LPDPRX_AUX_D1_P
LPDPRX_AUX_D2_P
LPDPRX_AUX_D3_P
LPDPRX_AUX_D4_P
LPDPRX_BYP_CLK_P
LPDPRX_BYP_CLK_N
LPDPRX_RCAL_P
LPDPRX_RCAL_N
LPDPRX_EXT_C
LPDP_TX0P
LPDP_TX0N
LPDP_TX1P
LPDP_TX1N
LPDP_TX2P
LPDP_TX2N
LPDP_TX3P
LPDP_TX3N
LPDP_AUX_P
LPDP_AUX_N
LPDP_CAL_DRV_OUT
LPDP_CAL_VSS_EXT
EDP_HPD
DP_WAKEUP
Dev ONLY
Reserved for PanelID[1:0] on ap_dev board
Reserved for PanelID[1:0] on ap_dev board
PP_VDD_MAIN
C1010 33PF
C1011 33PF
AC return path for LCM LPDP which is referenced to GND and VDD_MAIN

by kass

SOC - SERIAL INTERFACES

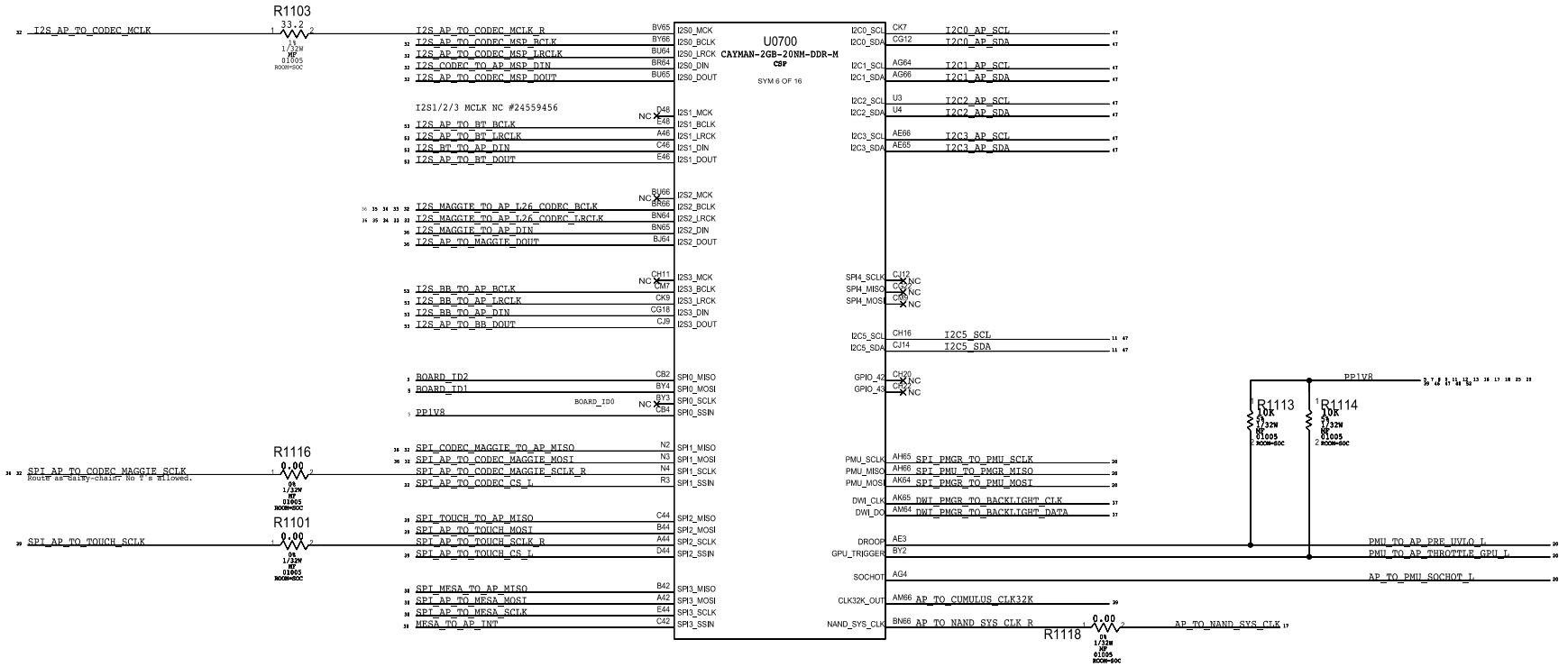

I2C5

See Radar#25316444 for Details

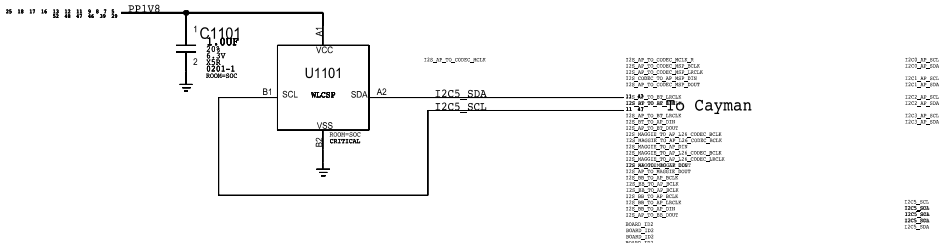

by kass

SOC - GPIO INTERFACES

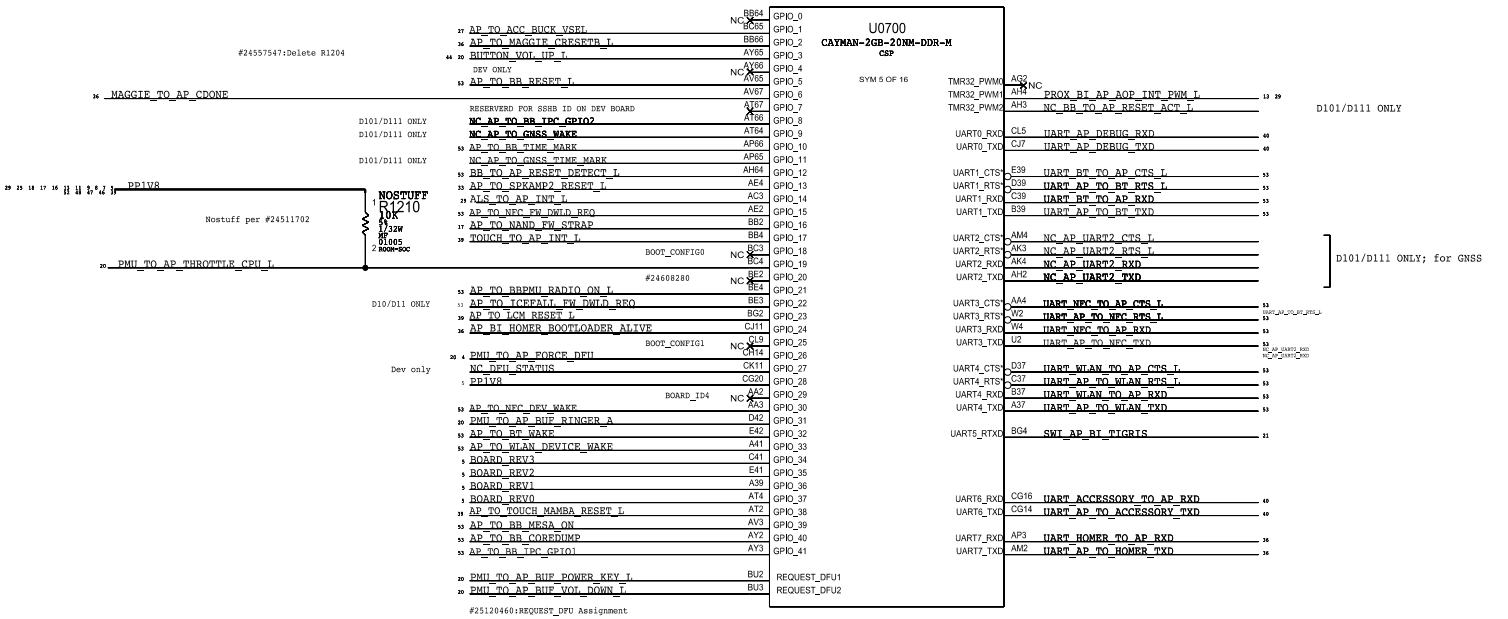

by kass

SOC - AOP

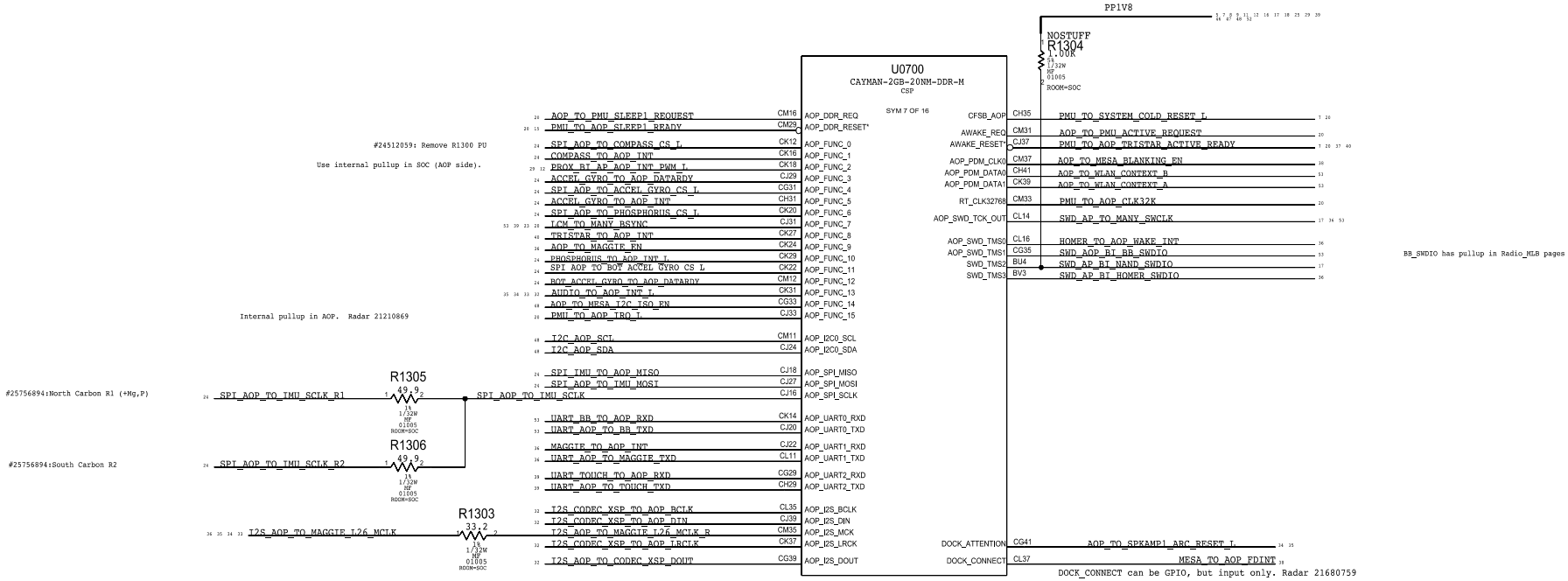

by kass

SOC - CPU, GPU & SOC RAILS

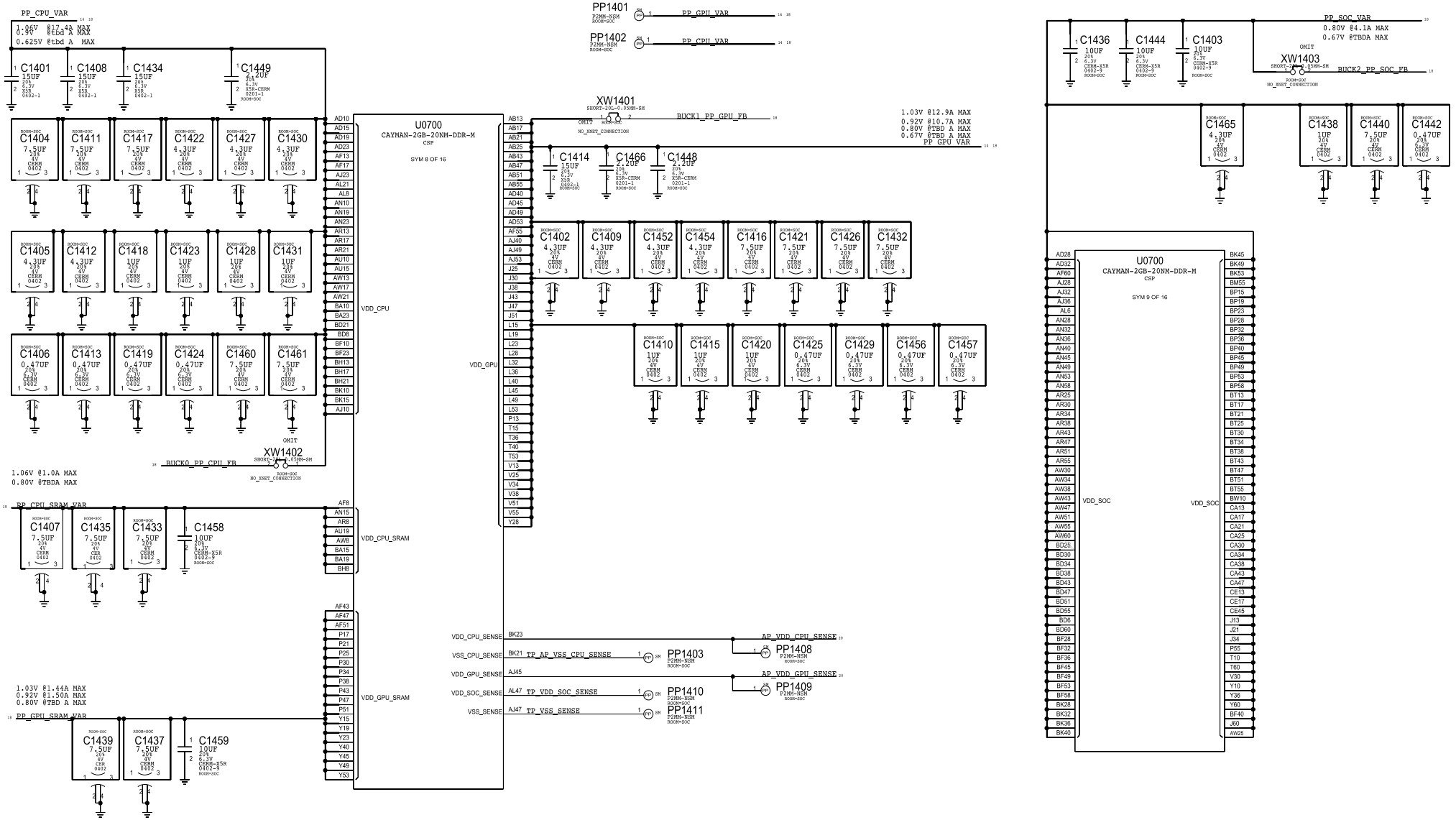

by kass

SOC - POWER SUPPLIES

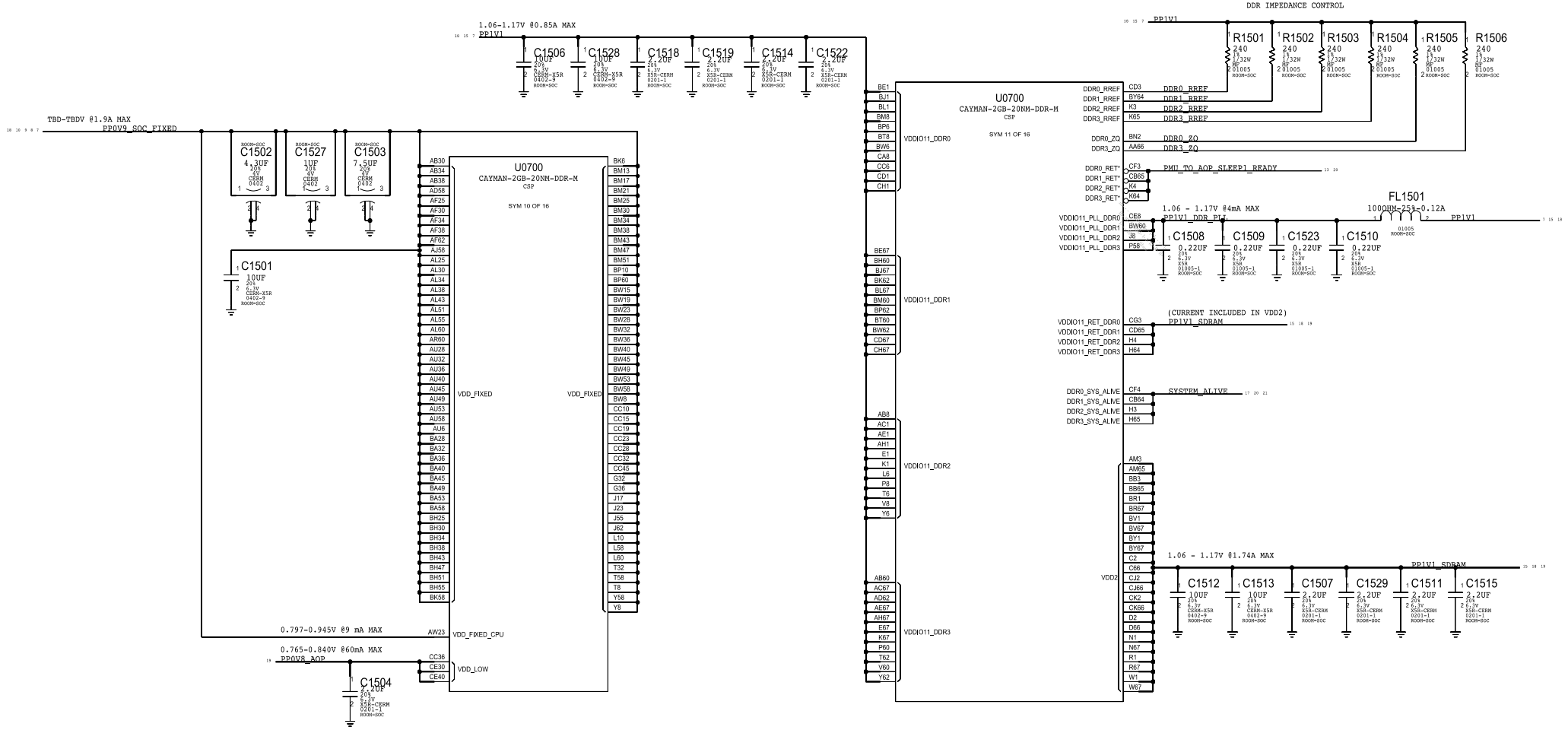

by kass

SOC - POWER SUPPLIES

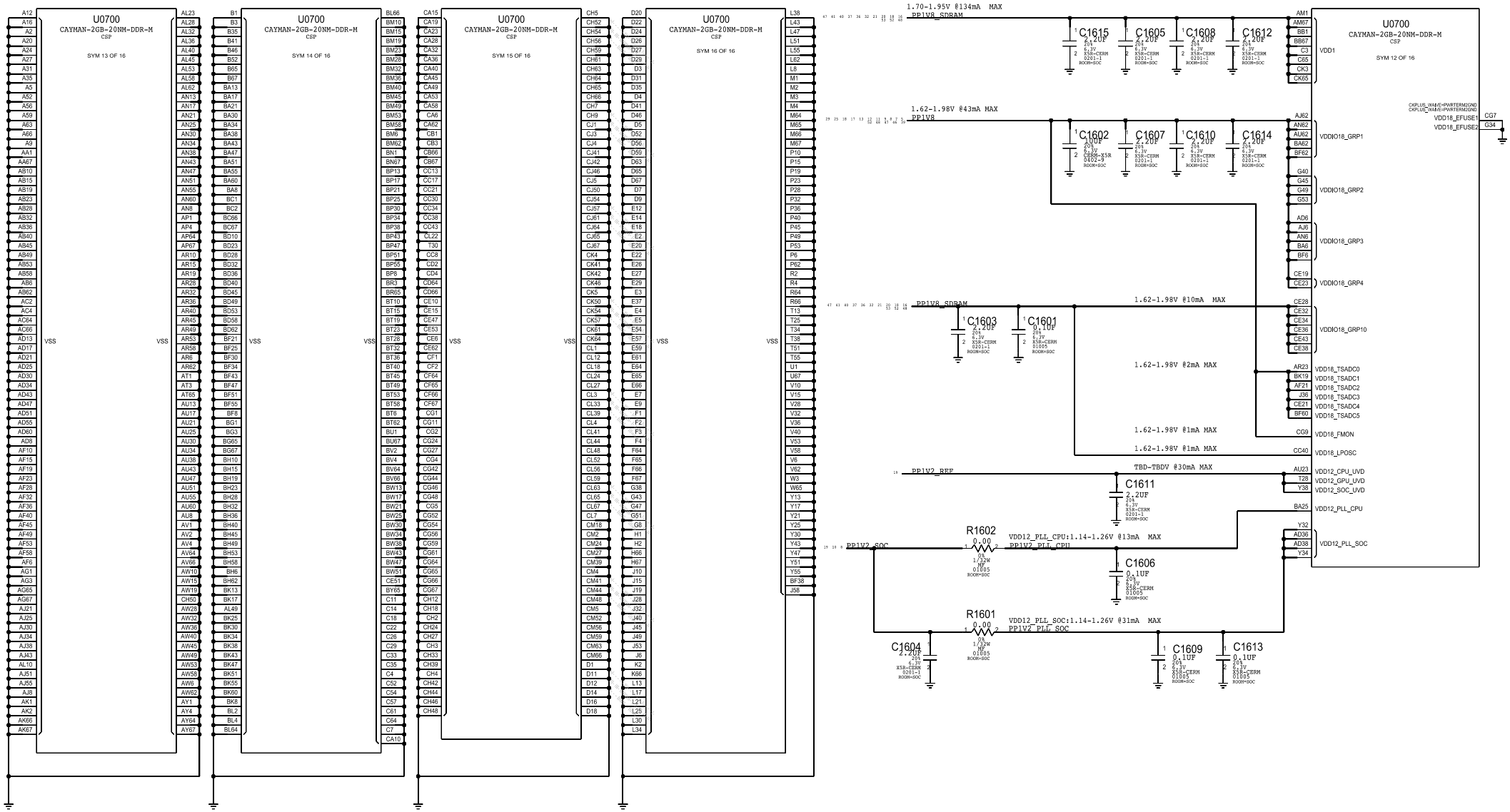

by kass

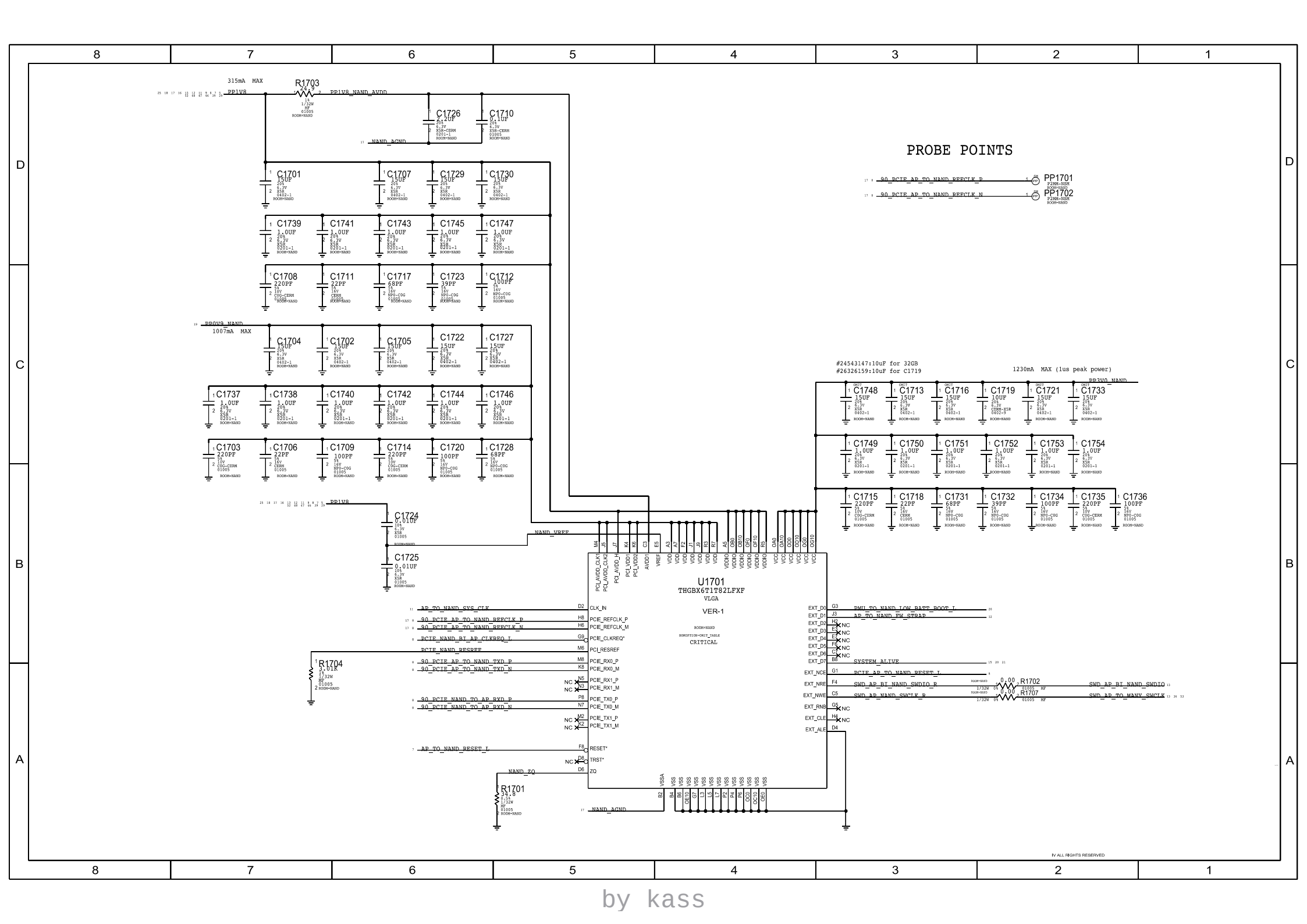
PROBE POINTS
PP1701
PP1702
U1701
THGBX6T1T82LFXF
VLGA
VER-1
CRITICAL
R1703
R1704
R1701
R1702
R1707
C1726
C1710
C1701
C1707
C1729
C1730
C1739
C1741
C1743
C1745
C1747
C1708
C1711
C1717
C1723
C1712
C1704
C1702
C1705
C1722
C1727
C1737
C1738
C1740
C1742
C1744
C1746
C1703
C1706
C1709
C1714
C1720
C1728
C1724
C1725
C1748
C1713
C1716
C1719
C1721
C1733
C1749
C1750
C1751
C1752
C1753
C1754
C1715
C1718
C1731
C1732
C1734
C1735
C1736
PP1V8
PP0V9_NAND
PP3V0_NAND
NAND_AGND
NAND_VREF
NAND_ZQ
AP_TO_NAND_SYS_CLK
90_PCIE_AP_TO_NAND_REFCLK_P
90_PCIE_AP_TO_NAND_REFCLK_N
PCIE_NAND_BI_AP_CLKREQ_L
PCIE_NAND_RESREF
90_PCIE_AP_TO_NAND_TXD_P
90_PCIE_AP_TO_NAND_TXD_N
90_PCIE_NAND_TO_AP_RXD_P
90_PCIE_NAND_TO_AP_RXD_N
AP_TO_NAND_RESET_L
PMU_TO_NAND_LOW_BATT_BOOT_L
AP_TO_NAND_FW_STRAP
SYSTEM_ALIVE
PCIE_AP_TO_NAND_RESET_L
SWD_AP_BI_NAND_SWDIO_R
SWD_AP_NAND_SWCLK_R
SWD_AP_BI_NAND_SWDIO
SWD_AP_TO_MANY_SWCLK
315mA MAX
1007mA MAX
1230mA MAX (1us peak power)
#24543147:10uF for 32GB
#26326159:10uF for C1719
IV ALL RIGHTS RESERVED

by kass

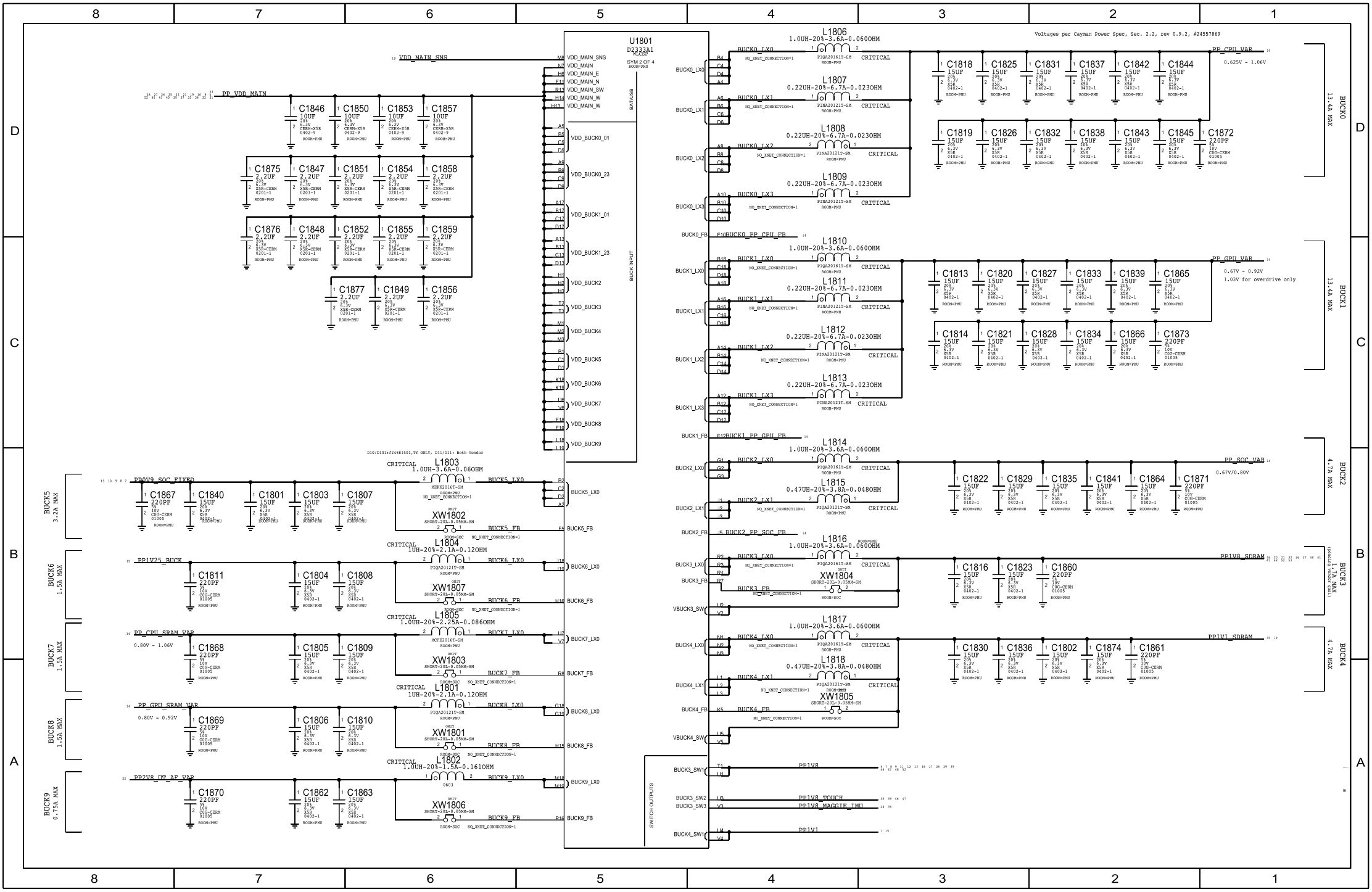
U1801
D2333A1
VLSS
SYM 2 OF 4
ROOM=PMU
VDD_MAIN_SNS
VDD_MAIN
VDD_MAIN_E
VDD_MAIN_N
VDD_MAIN_SW
VDD_MAIN_W
VDD_BUCK0_01
VDD_BUCK0_23
VDD_BUCK1_01
VDD_BUCK1_23
VDD_BUCK2
VDD_BUCK3
VDD_BUCK4
VDD_BUCK5
VDD_BUCK6
VDD_BUCK7
VDD_BUCK8
VDD_BUCK9
BATA1SB
BUCK INPUT
SWITCH OUTPUTS
PP_VDD_MAIN
Voltages per Cayman Power Spec, Sec. 2.2, rev 0.9.2, #24557869
BUCK0
13.4A MAX
BUCK1
13.4A MAX
BUCK2
4.7A MAX
BUCK3
1.7A MAX
BUCK4
4.7A MAX
BUCK5
3.2A MAX
BUCK6
1.5A MAX
BUCK7
1.5A MAX
BUCK8
1.5A MAX
BUCK9
0.75A MAX
PP_CPU_VAR
0.625V - 1.06V
PP_GPU_VAR
0.67V - 0.92V
1.03V for overdrive only
PP_SOC_VAR
0.67V/0.80V
PP1V8_SDRAM
PP1V1_SDRAM
PP0V9_SOC_FIXED
PP1V25_BUCK
PP_CPU_SRAM_VAR
0.80V - 1.06V
PP_GPU_SRAM_VAR
0.80V - 0.92V
PP2V8_UT_AF_VAR
PP1V8
PP1V8_TOUCH
PP1V8_MAGGIE_IMU
PP1V1
CRITICAL
D10/D101:#24681501,TY ONLY, D11/D11: Both Vendor

by kass

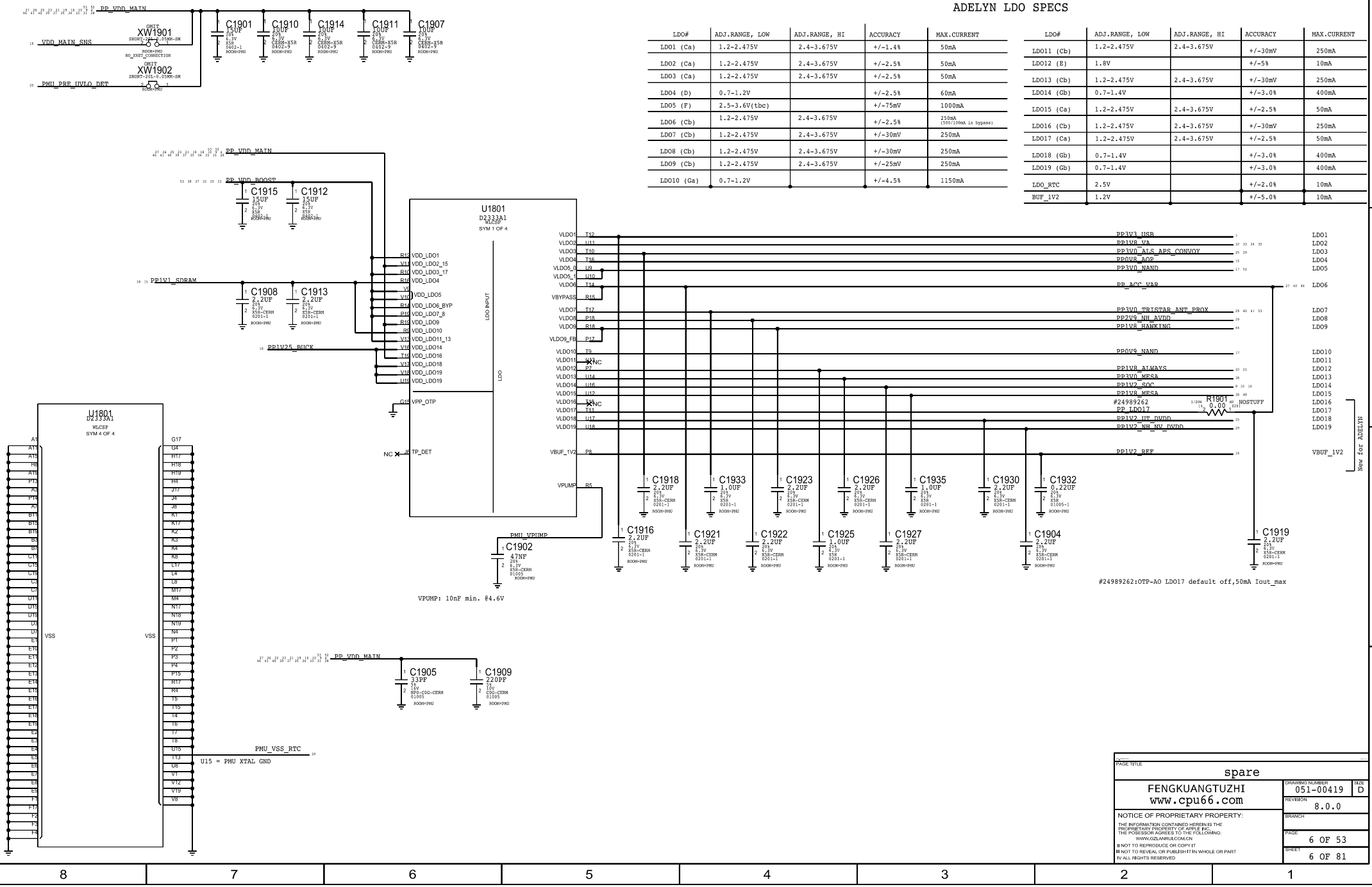

ADELYN LDO SPECS

LDO#	ADJ.RANGE, LOW	ADJ.RANGE, HI	ACCURACY	MAX.CURRENT
LDO1 (Ca)	1.2-2.475V	2.4-3.675V	+/-1.4%	50mA
LDO2 (Ca)	1.2-2.475V	2.4-3.675V	+/-2.5%	50mA
LDO3 (Ca)	1.2-2.475V	2.4-3.675V	+/-2.5%	50mA
LDO4 (D)	0.7-1.2V		+/-2.5%	60mA
LDO5 (F)	2.5-3.6V(tbc)		+/-75mV	1000mA
LDO6 (Cb)	1.2-2.475V	2.4-3.675V	+/-2.5%	250mA (500/100mA in bypass)
LDO7 (Cb)	1.2-2.475V	2.4-3.675V	+/-30mV	250mA
LDO8 (Cb)	1.2-2.475V	2.4-3.675V	+/-30mV	250mA
LDO9 (Cb)	1.2-2.475V	2.4-3.675V	+/-25mV	250mA
LDO10 (Ga)	0.7-1.2V		+/-4.5%	1150mA

LDO#	ADJ.RANGE, LOW	ADJ.RANGE, HI	ACCURACY	MAX.CURRENT
LDO11 (Cb)	1.2-2.475V	2.4-3.675V	+/-30mV	250mA
LDO12 (E)	1.8V		+/-5%	10mA
LDO13 (Cb)	1.2-2.475V	2.4-3.675V	+/-30mV	250mA
LDO14 (Gb)	0.7-1.4V		+/-3.0%	400mA
LDO15 (Ca)	1.2-2.475V	2.4-3.675V	+/-2.5%	50mA
LDO16 (Cb)	1.2-2.475V	2.4-3.675V	+/-30mV	250mA
LDO17 (Ca)	1.2-2.475V	2.4-3.675V	+/-2.5%	50mA
LDO18 (Gb)	0.7-1.4V		+/-3.0%	400mA
LDO19 (Gb)	0.7-1.4V		+/-3.0%	400mA
LDO_RTC	2.5V		+/-2.0%	10mA
BUF_1V2	1.2V		+/-5.0%	10mA

PAGE TITLE: spare

FENGKUANGTUZHI
www.cpu66.com

DRAWING NUMBER: 051-00419 SIZE: D
REVISION: 8.0.0
BRANCH:
PAGE: 6 OF 53
SHEET: 6 OF 81

NOTICE OF PROPRIETARY PROPERTY:
THE INFORMATION CONTAINED HEREIN IS THE PROPRIETARY PROPERTY OF APPLE INC.
THE POSESSOR AGREES TO THE FOLLOWING:
WWW.GZLANRUI.COM.CN
I NOT TO REPRODUCE OR COPY IT
II NOT TO REVEAL OR PUBLISH IT IN WHOLE OR PART
IV ALL RIGHTS RESERVED

by kass

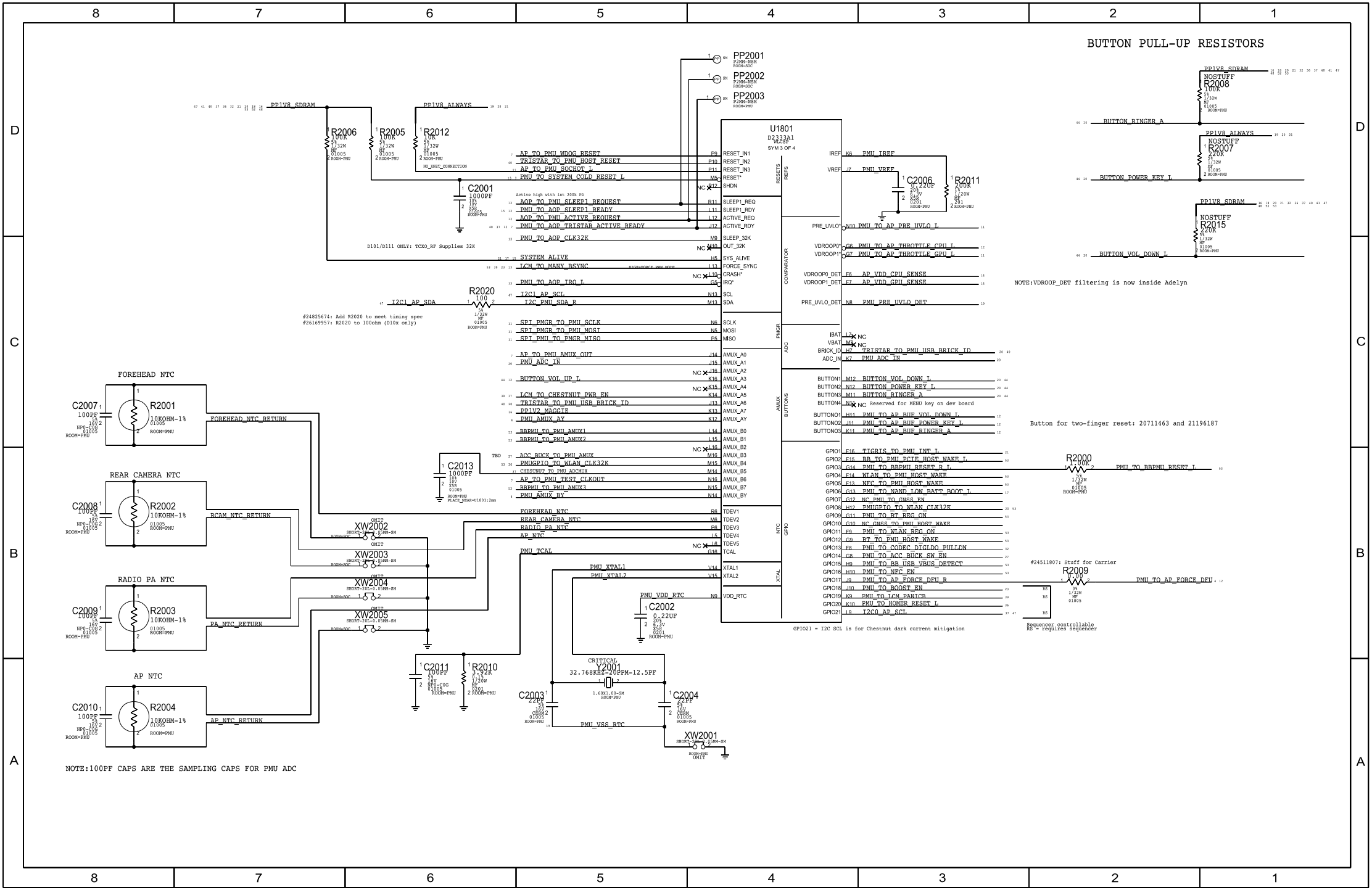
BUTTON PULL-UP RESISTORS
U1801
D2333A1
SYM 3 OF 4
PP2001
PP2002
PP2003
PP1V8_SDRAM
PP1V8_ALWAYS
R2006
R2005
R2012
C2001
1000PF
D101/D111 ONLY: TCXO_RF Supplies 32K
AP_TO_PMU_WDOG_RESET
TRISTAR_TO_PMU_HOST_RESET
AP_TO_PMU_SOCHOT_L
PMU_TO_SYSTEM_COLD_RESET_L
AOP_TO_PMU_SLEEP1_REQUEST
PMU_TO_AOP_SLEEP1_READY
AOP_TO_PMU_ACTIVE_REQUEST
PMU_TO_AOP_TRISTAR_ACTIVE_READY
PMU_TO_AOP_CLK32K
SYSTEM_ALIVE
LCM_TO_MANY_BSYNC
PMU_TO_AOP_IRQ_L
I2C1_AP_SCL
I2C1_AP_SDA
I2C_PMU_SDA_R
R2020
100
#24825674: Add R2020 to meet timing spec
#26169957: R2020 to 100ohm (D10x only)
SPI_PMGR_TO_PMU_SCLK
SPI_PMGR_TO_PMU_MOSI
SPI_PMU_TO_PMGR_MISO
AP_TO_PMU_AMUX_OUT
PMU_ADC_IN
BUTTON_VOL_UP_L
LCM_TO_CHESTNUT_PWR_EN
TRISTAR_TO_PMU_USB_BRICK_ID
PP1V2_MAGGIE
PMU_AMUX_AY
BBPMU_TO_PMU_AMUX1
BBPMU_TO_PMU_AMUX2
ACC_BUCK_TO_PMU_AMUX
PMUGPIO_TO_WLAN_CLK32K
CHESTNUT_TO_PMU_ADCMUX
AP_TO_PMU_TEST_CLKOUT
BBPMU_TO_PMU_AMUX3
PMU_AMUX_BY
C2013
1000PF
FOREHEAD_NTC
REAR_CAMERA_NTC
RADIO_PA_NTC
AP_NTC
PMU_TCAL
PMU_XTAL1
PMU_XTAL2
PMU_VDD_RTC
C2002
0.22UF
C2011
100PF
R2010
3.92K
CRITICAL
Y2001
32.768KHZ-20PPM-12.5PF
C2003
22PF
C2004
22PF
PMU_VSS_RTC
XW2001
XW2002
XW2003
XW2004
XW2005
FOREHEAD NTC
C2007
100PF
R2001
10KOHM-1%
FOREHEAD_NTC_RETURN
REAR CAMERA NTC
C2008
100PF
R2002
10KOHM-1%
RCAM_NTC_RETURN
RADIO PA NTC
C2009
100PF
R2003
10KOHM-1%
PA_NTC_RETURN
AP NTC
C2010
100PF
R2004
10KOHM-1%
AP_NTC_RETURN
NOTE:100PF CAPS ARE THE SAMPLING CAPS FOR PMU ADC
PMU_IREF
PMU_VREF
C2006
0.22UF
R2011
200K
PMU_TO_AP_PRE_UVLO_L
PMU_TO_AP_THROTTLE_CPU_L
PMU_TO_AP_THROTTLE_GPU_L
AP_VDD_CPU_SENSE
AP_VDD_GPU_SENSE
PMU_PRE_UVLO_DET
TRISTAR_TO_PMU_USB_BRICK_ID
PMU_ADC_IN
BUTTON_VOL_DOWN_L
BUTTON_POWER_KEY_L
BUTTON_RINGER_A
Reserved for MENU key on dev board
PMU_TO_AP_BUF_VOL_DOWN_L
PMU_TO_AP_BUF_POWER_KEY_L
PMU_TO_AP_BUF_RINGER_A
TIGRIS_TO_PMU_INT_L
BB_TO_PMU_PCIE_HOST_WAKE_L
PMU_TO_BBPMU_RESET_R_L
WLAN_TO_PMU_HOST_WAKE
NFC_TO_PMU_HOST_WAKE
PMU_TO_NAND_LOW_BATT_BOOT_L
NC_PMU_TO_GNSS_EN
PMUGPIO_TO_WLAN_CLK32K
PMU_TO_BT_REG_ON
NC_GNSS_TO_PMU_HOST_WAKE
PMU_TO_WLAN_REG_ON
BT_TO_PMU_HOST_WAKE
PMU_TO_CODEC_DIGLDO_PULLDN
PMU_TO_ACC_BUCK_SW_EN
PMU_TO_BB_USB_VBUS_DETECT
PMU_TO_NFC_EN
PMU_TO_AP_FORCE_DFU_R
PMU_TO_BOOST_EN
PMU_TO_LCM_PANICB
PMU_TO_HOMER_RESET_L
I2C0_AP_SCL
GPIO21 = I2C SCL is for Chestnut dark current mitigation
PP1V8_SDRAM
NOSTUFF
R2008
100K
BUTTON_RINGER_A
PP1V8_ALWAYS
NOSTUFF
R2007
220K
BUTTON_POWER_KEY_L
PP1V8_SDRAM
NOSTUFF
R2015
220K
BUTTON_VOL_DOWN_L
NOTE:VDROOP_DET filtering is now inside Adelyn
Button for two-finger reset: 20711463 and 21196187
R2000
1.00K
PMU_TO_BBPMU_RESET_L
#24511807: Stuff for Carrier
R2009
0.00
PMU_TO_AP_FORCE_DFU
Sequencer controllable
RS = requires sequencer

by kass

TIGRIS CHARGER

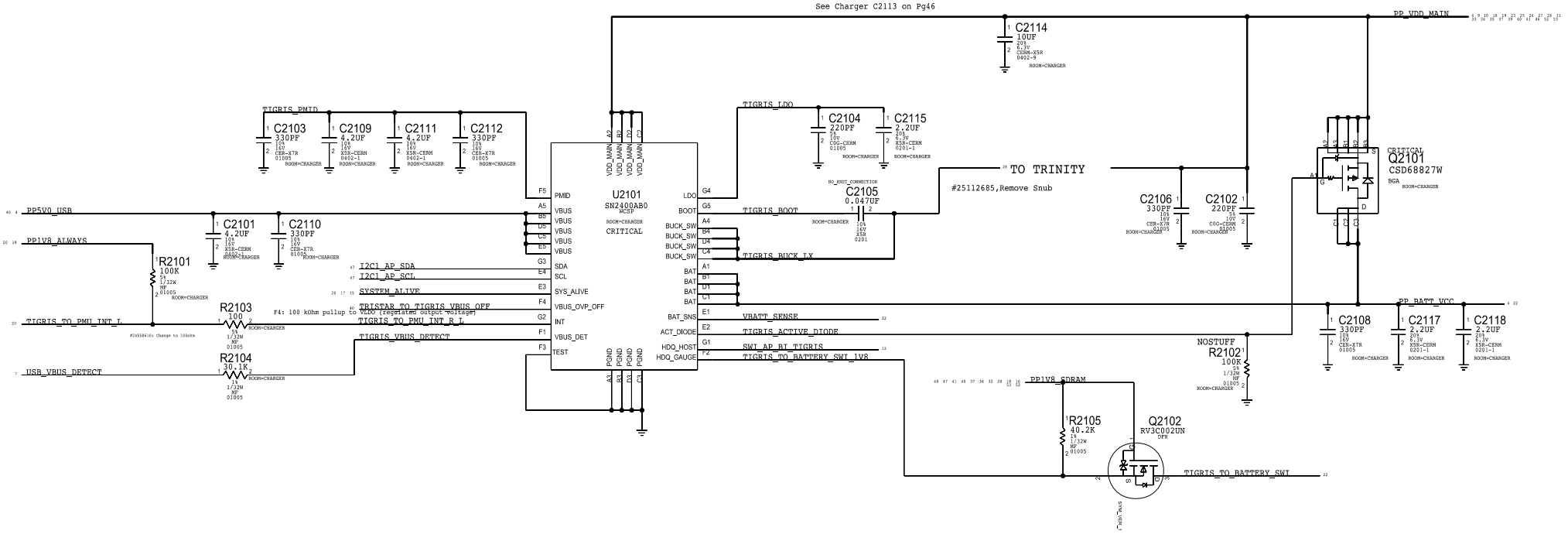

by kass

BATTERY CONNECTOR

THIS ONE ON MLB ---> 516S00172 (matches d10 mlb MCO rev 27)

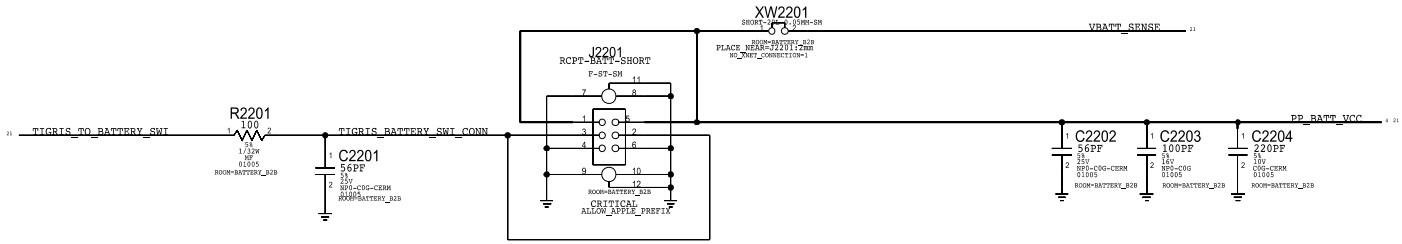

by kass

BOOST

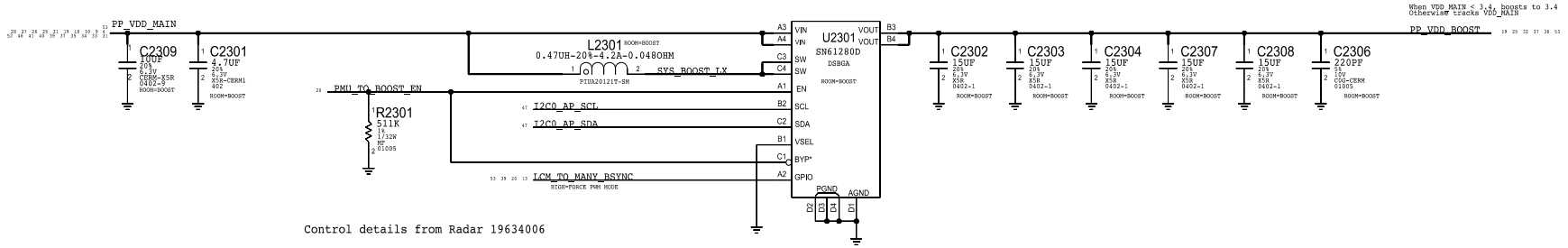

Control details from Radar 19634006

by kass

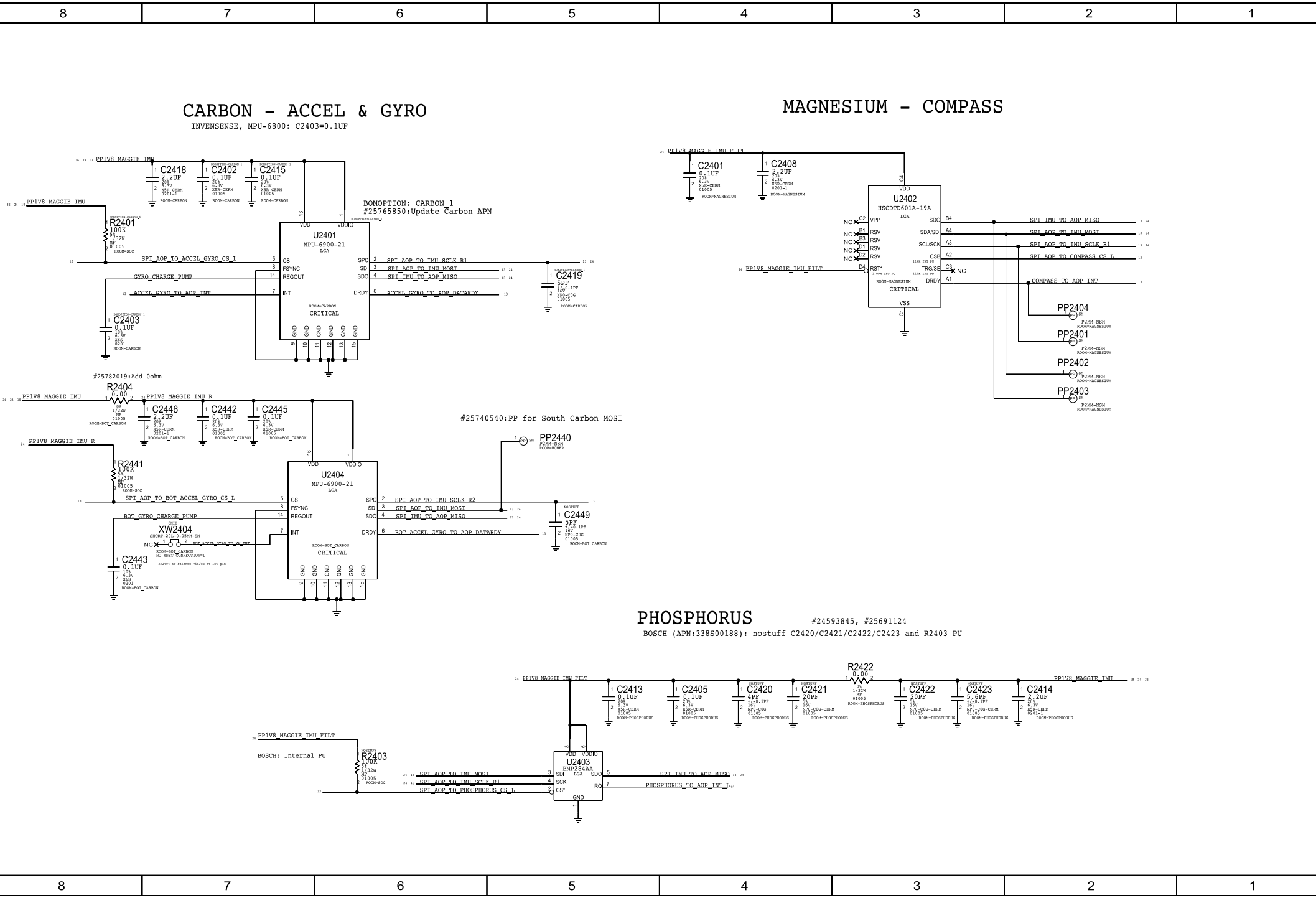
CARBON - ACCEL & GYRO
INVENSENSE, MPU-6800: C2403=0.1UF
MAGNESIUM - COMPASS
BOMOPTION: CARBON_1
#25765850:Update Carbon APN
#25782019:Add 0ohm
#25740540:PP for South Carbon MOSI
PHOSPHORUS
#24593845, #25691124
BOSCH (APN:338S00188): nostuff C2420/C2421/C2422/C2423 and R2403 PU
BOSCH: Internal PU
U2401
MPU-6900-21
U2402
HSCDTD601A-19A
U2404
MPU-6900-21
U2403
BMP284AA
PP1V8_MAGGIE_IMU
PP1V8_MAGGIE_IMU_FILT
PP1V8_MAGGIE_IMU_R
SPI_AOP_TO_ACCEL_GYRO_CS_L
GYRO_CHARGE_PUMP
ACCEL_GYRO_TO_AOP_INT
SPI_AOP_TO_IMU_SCLK_R1
SPI_AOP_TO_IMU_MOSI
SPI_IMU_TO_AOP_MISO
ACCEL_GYRO_TO_AOP_DATARDY
SPI_AOP_TO_BOT_ACCEL_GYRO_CS_L
BOT_GYRO_CHARGE_PUMP
SPI_AOP_TO_IMU_SCLK_R2
BOT_ACCEL_GYRO_TO_AOP_DATARDY
SPI_AOP_TO_PHOSPHORUS_CS_L
PHOSPHORUS_TO_AOP_INT_L
SPI_AOP_TO_COMPASS_CS_L
COMPASS_TO_AOP_INT
PP2404
PP2401
PP2402
PP2403
PP2440
XW2404
R2401
R2404
R2441
R2403
R2422
C2418
C2402
C2415
C2403
C2419
C2448
C2442
C2445
C2443
C2449
C2401
C2408
C2413
C2405
C2420
C2421
C2422
C2423
C2414

by kass

THIS PAGE UNIQUE TO SMALL FORM FACTOR

UTAH POWER

NOTE: OUTPUT IMPDEANCE MUST BE >0.005-OHM
IN ORDER TO MEET CAP ESR REQUIREMENT PER LDO SPEC.
VENDOR ALSO RECOMMENDS CIN = COUT FOR STABILITY

TI:353S00015
ST:353S00889

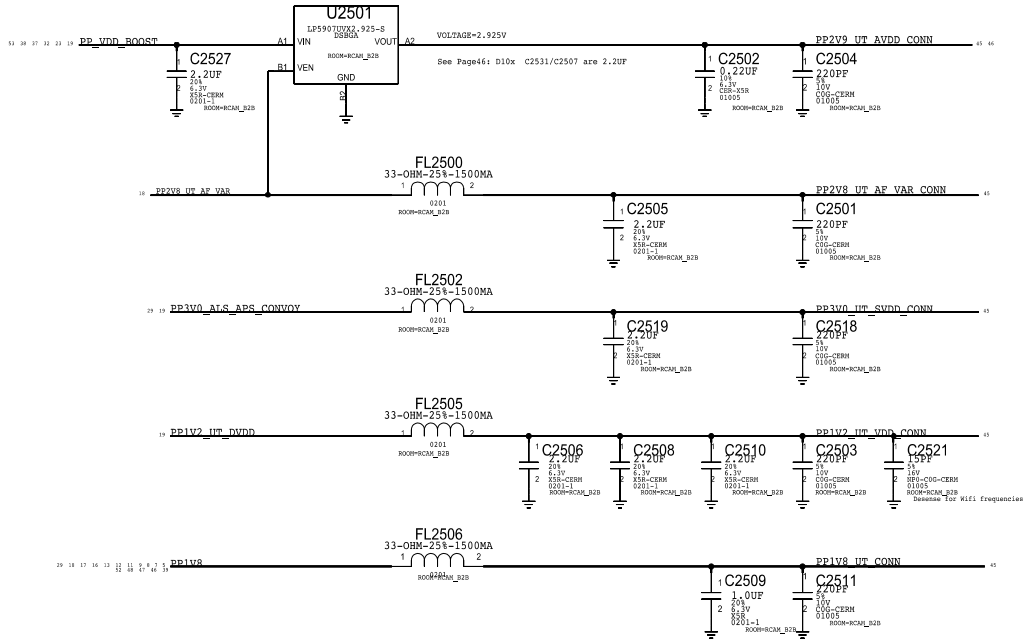

IO FILTERS

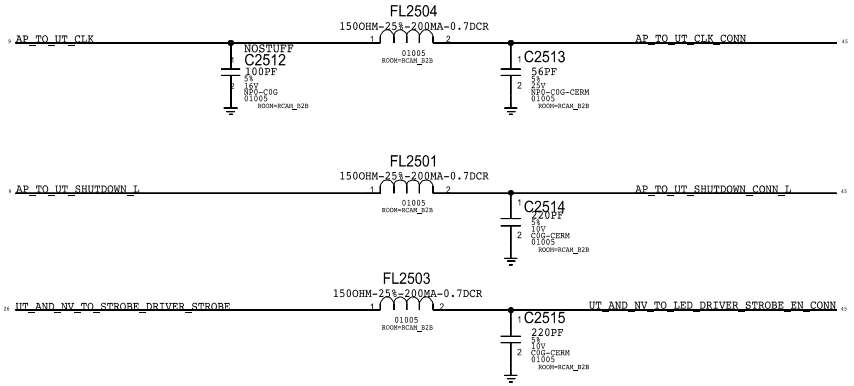

LPDP FILTERS

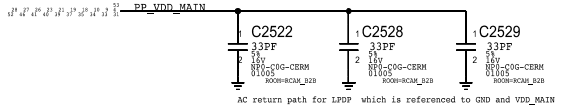

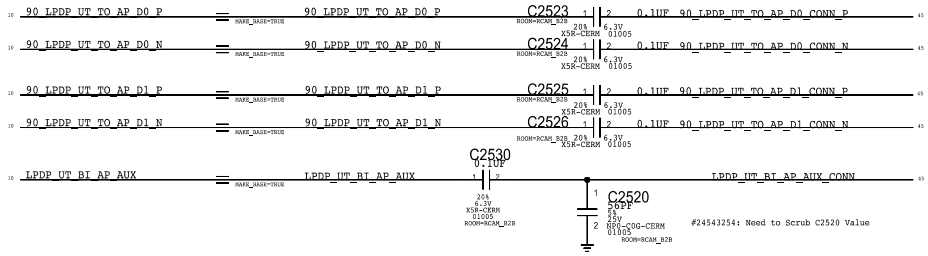

by kass

STROBE DRIVERS INSIDE NEO SIP MODULE

D10/sip_neo

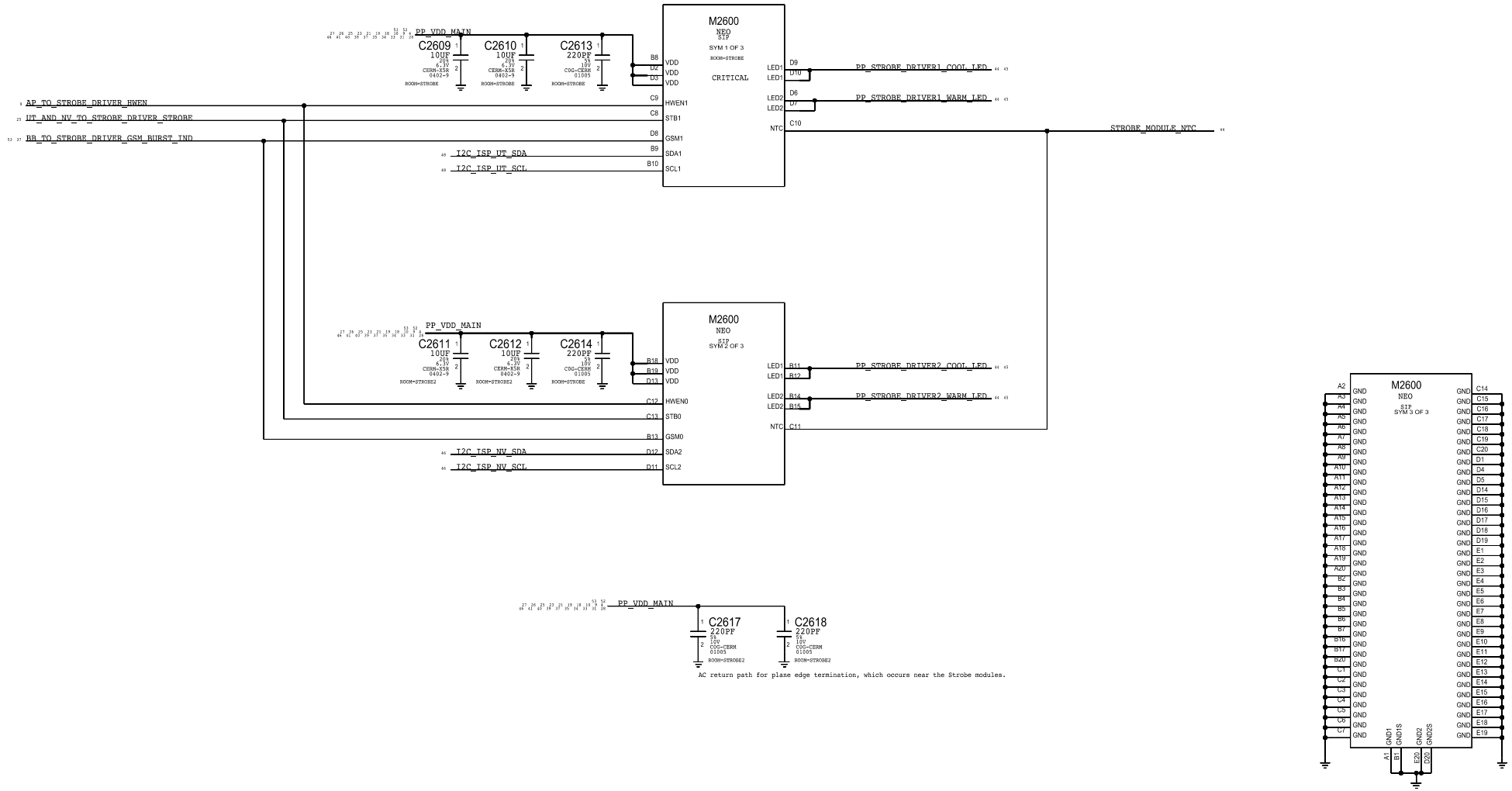

by kass

ACCESSORY BUCK

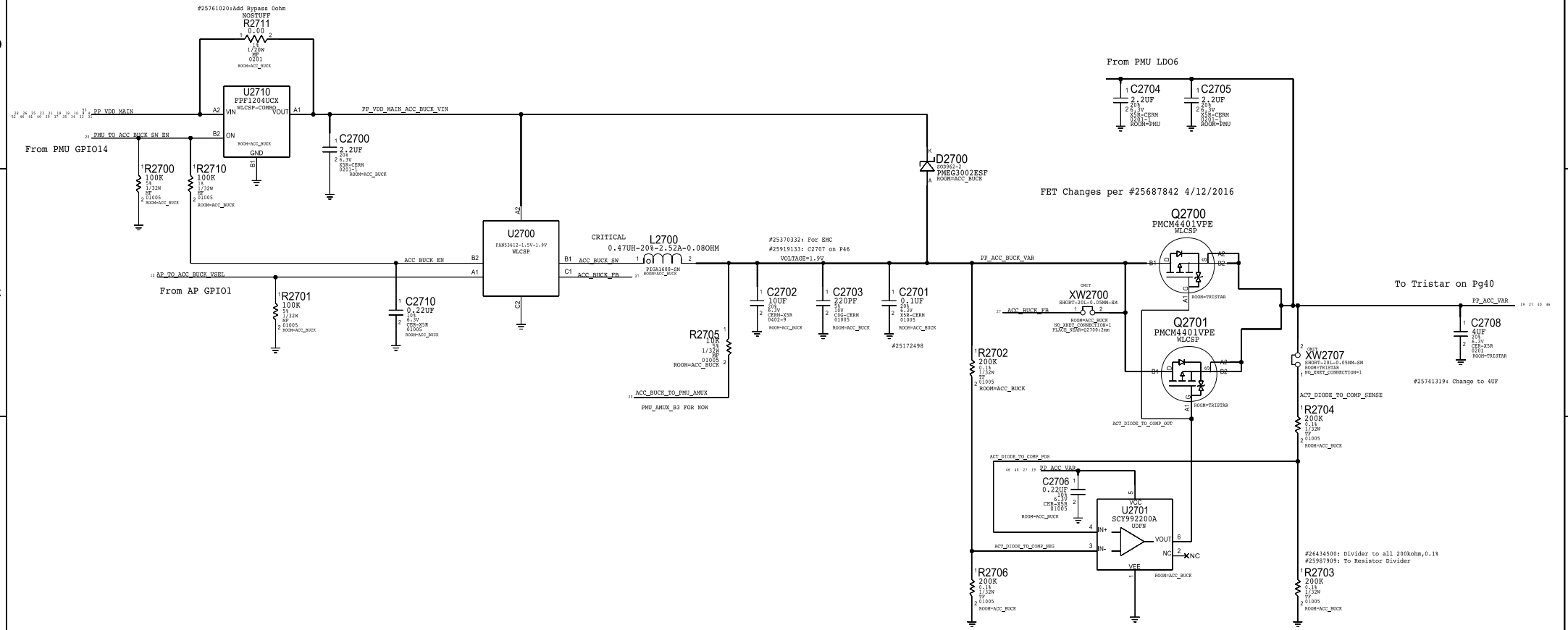

by kass

THIS PAGE UNIQUE TO SMALL FORM FACTOR

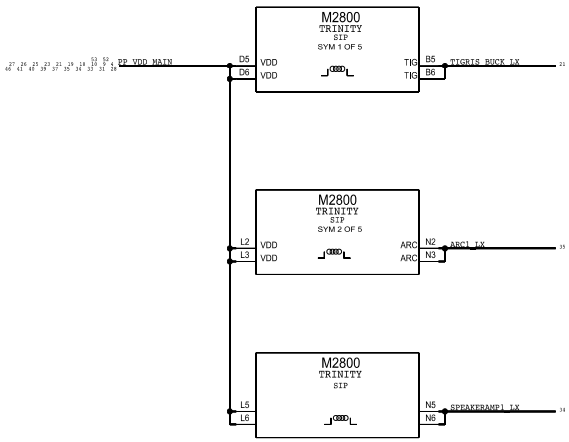

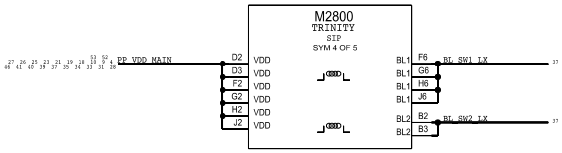

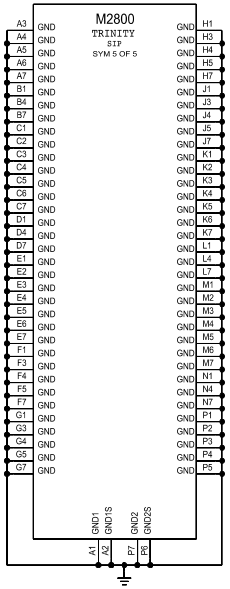

by kass

NEW HAMPSHIRE POWER

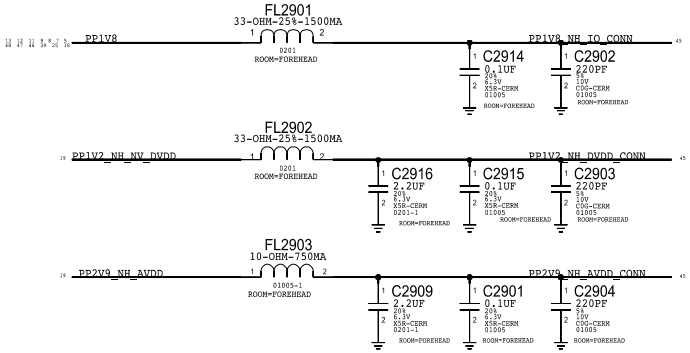

NEW HAMPSHIRE I/O

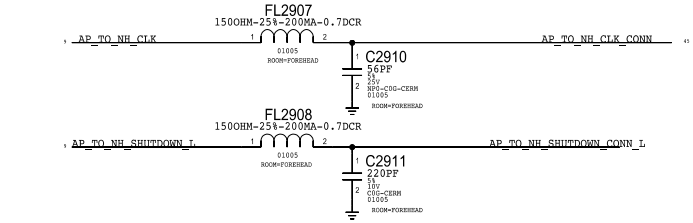

CONVOY I/O

#25657495: Update FL2905 to 100ohm

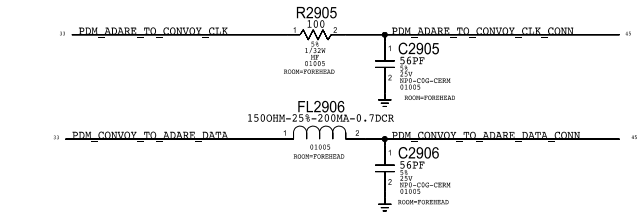

PROX/ALS I/O

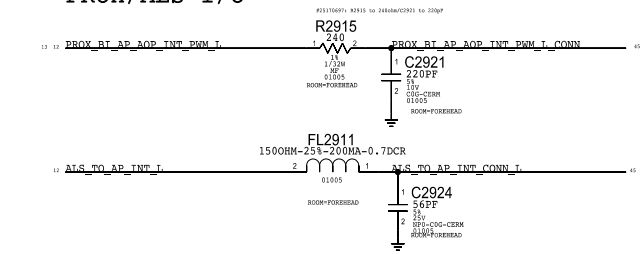

PROX, ALS, & CONVOY POWER

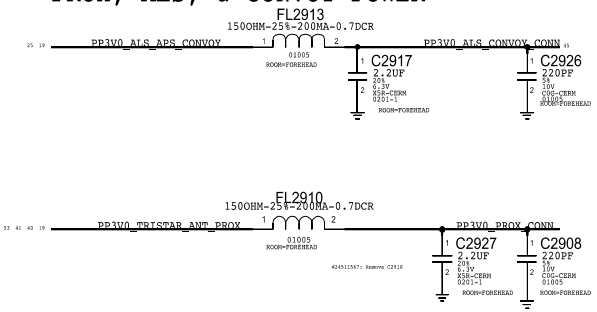

SPEAKER2

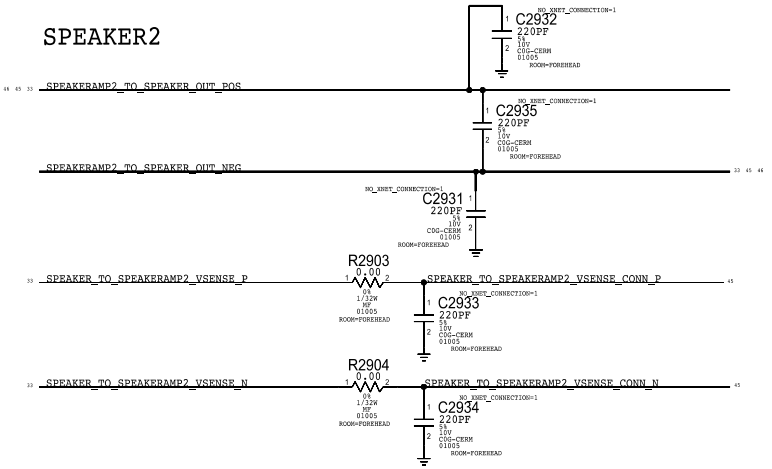

MIC3

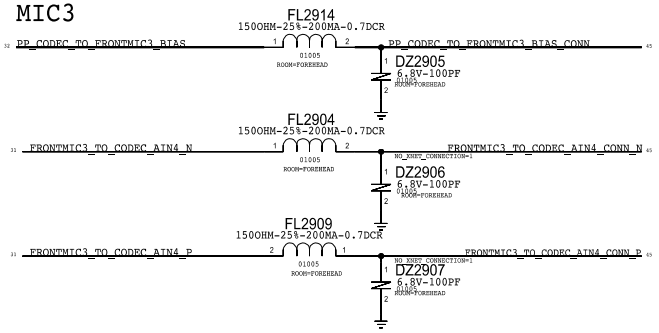

by kass

by kass

CALTRA AUDIO CODEC (ANALOG INPUTS & OUTPUTS)

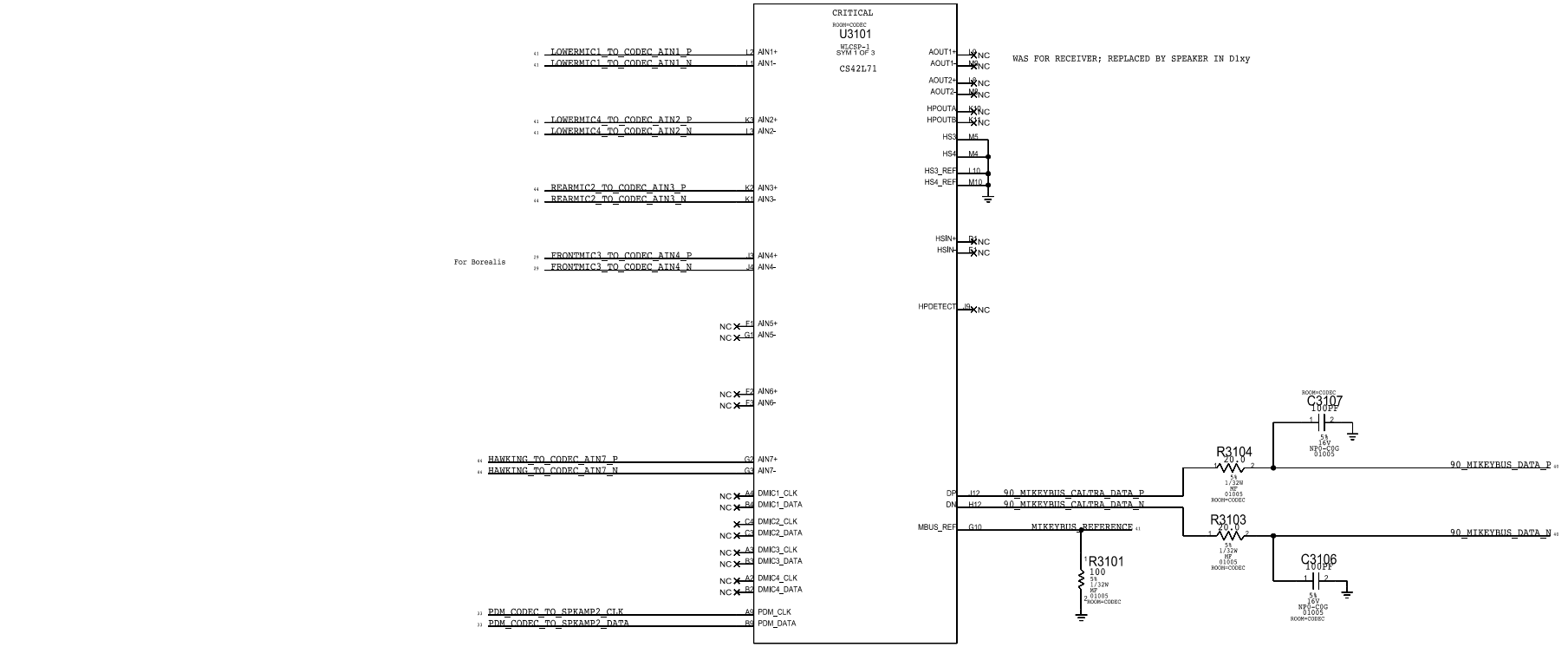

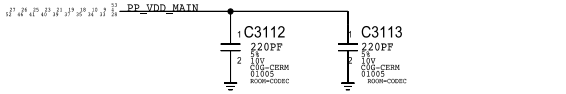

AC return path for Mikeybus which is referenced to GND and VDD_MAIN

Radar 21203307

by kass

CALTRA AUDIO CODEC (POWER & I/O)

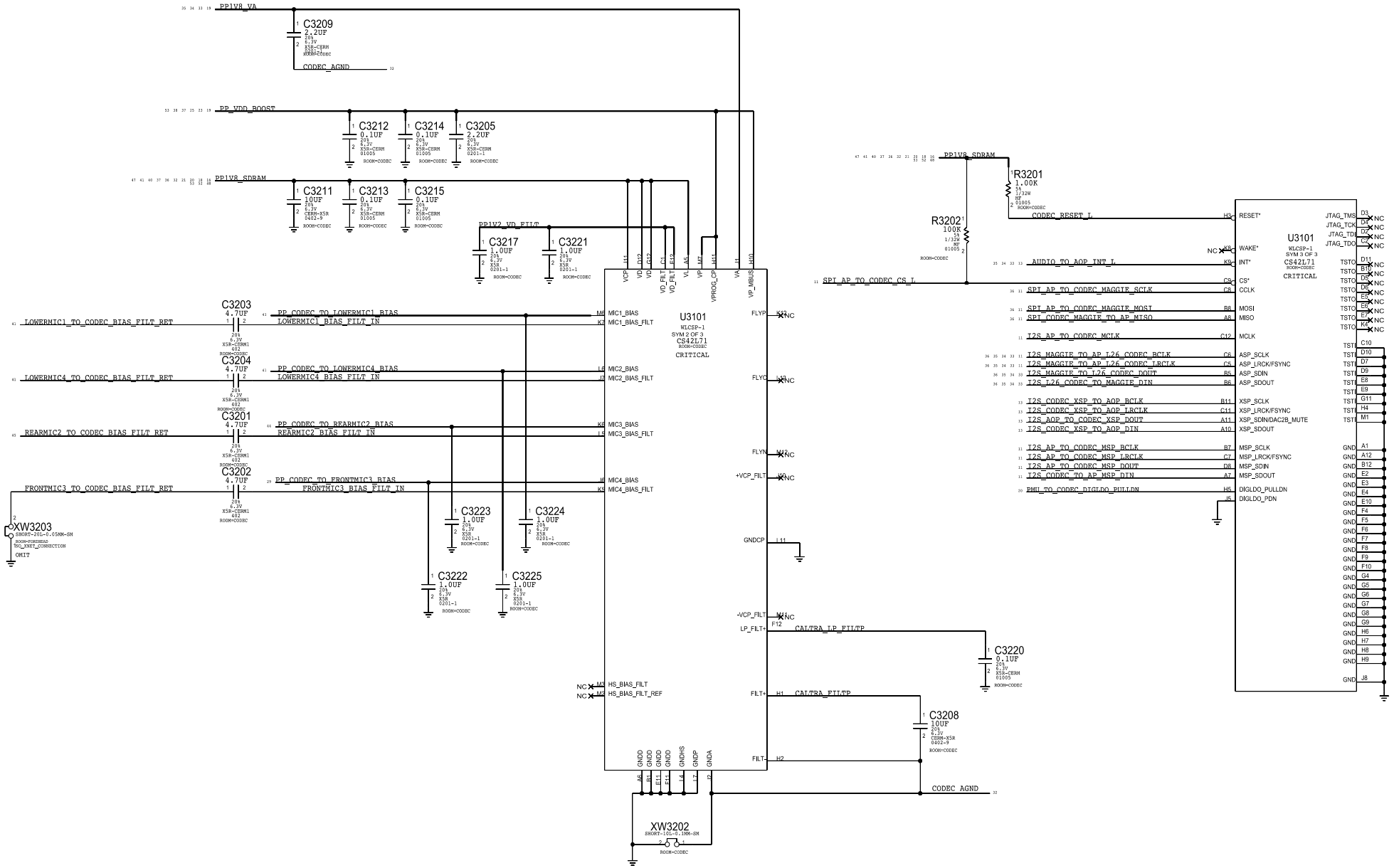

by kass

SPEAKER AMPLIFIER 2 (North)

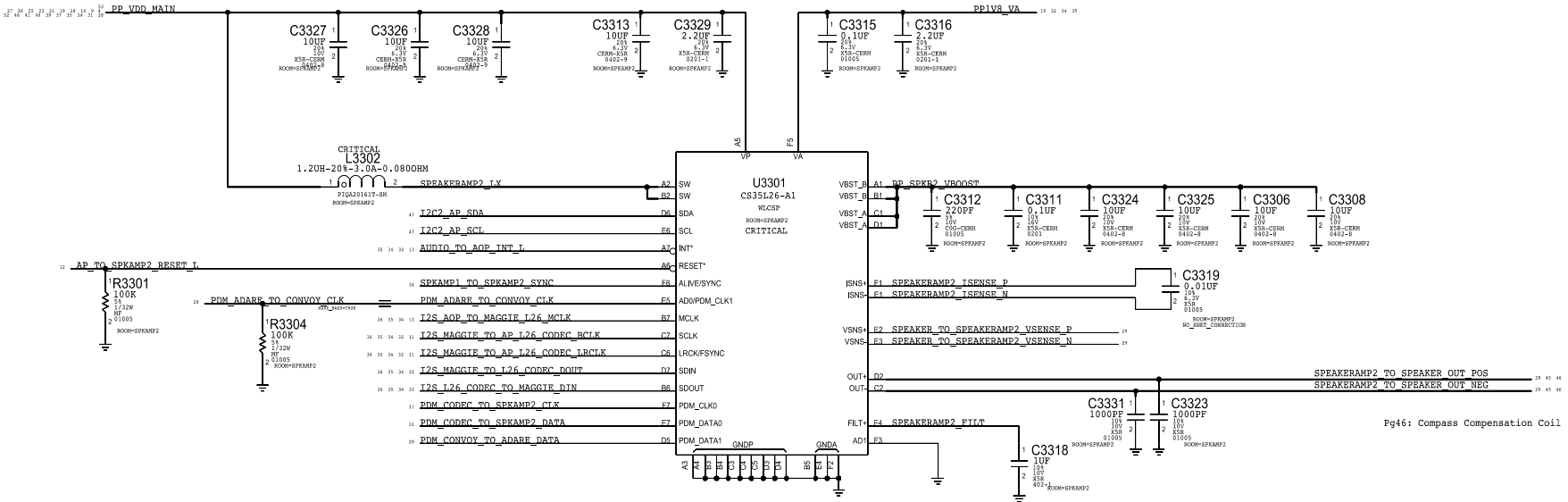

by kass

SPEAKER AMPLIFIER 1 (South)

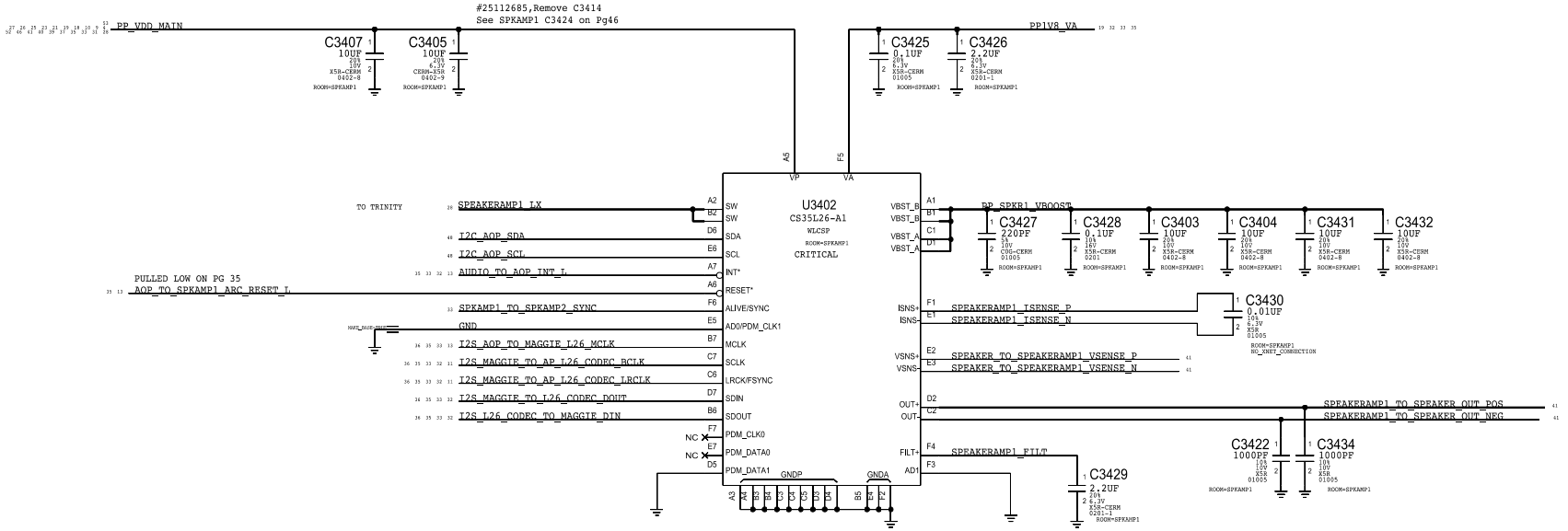

by kass

ARC DRIVER

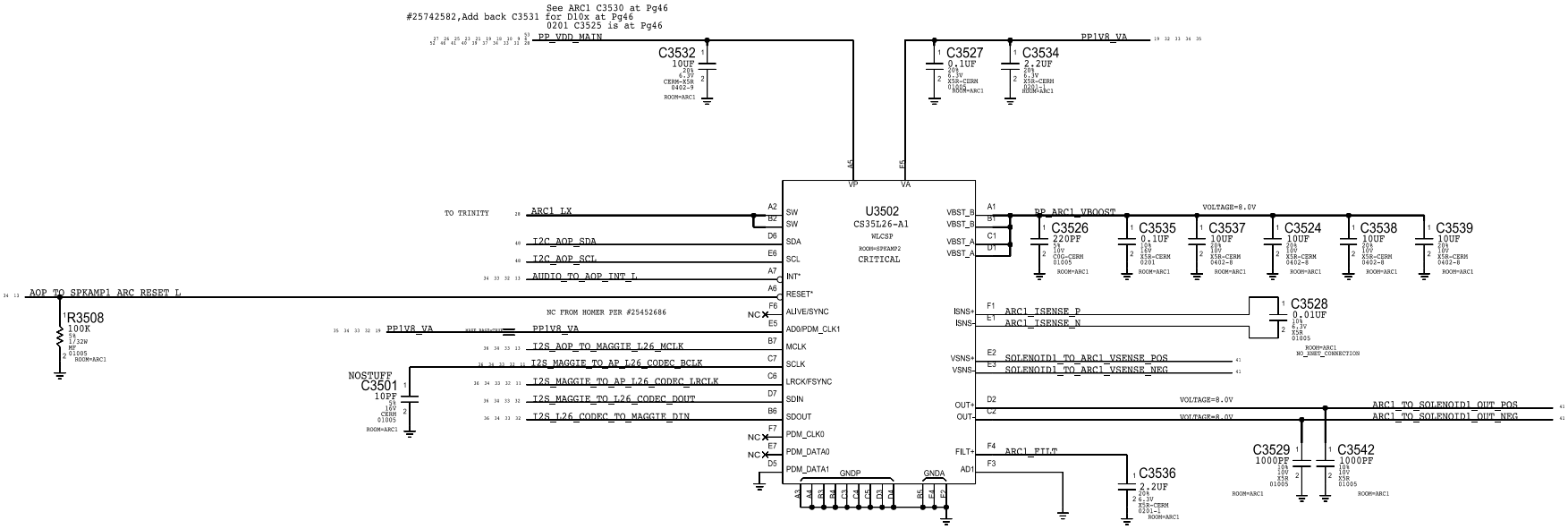

by kass

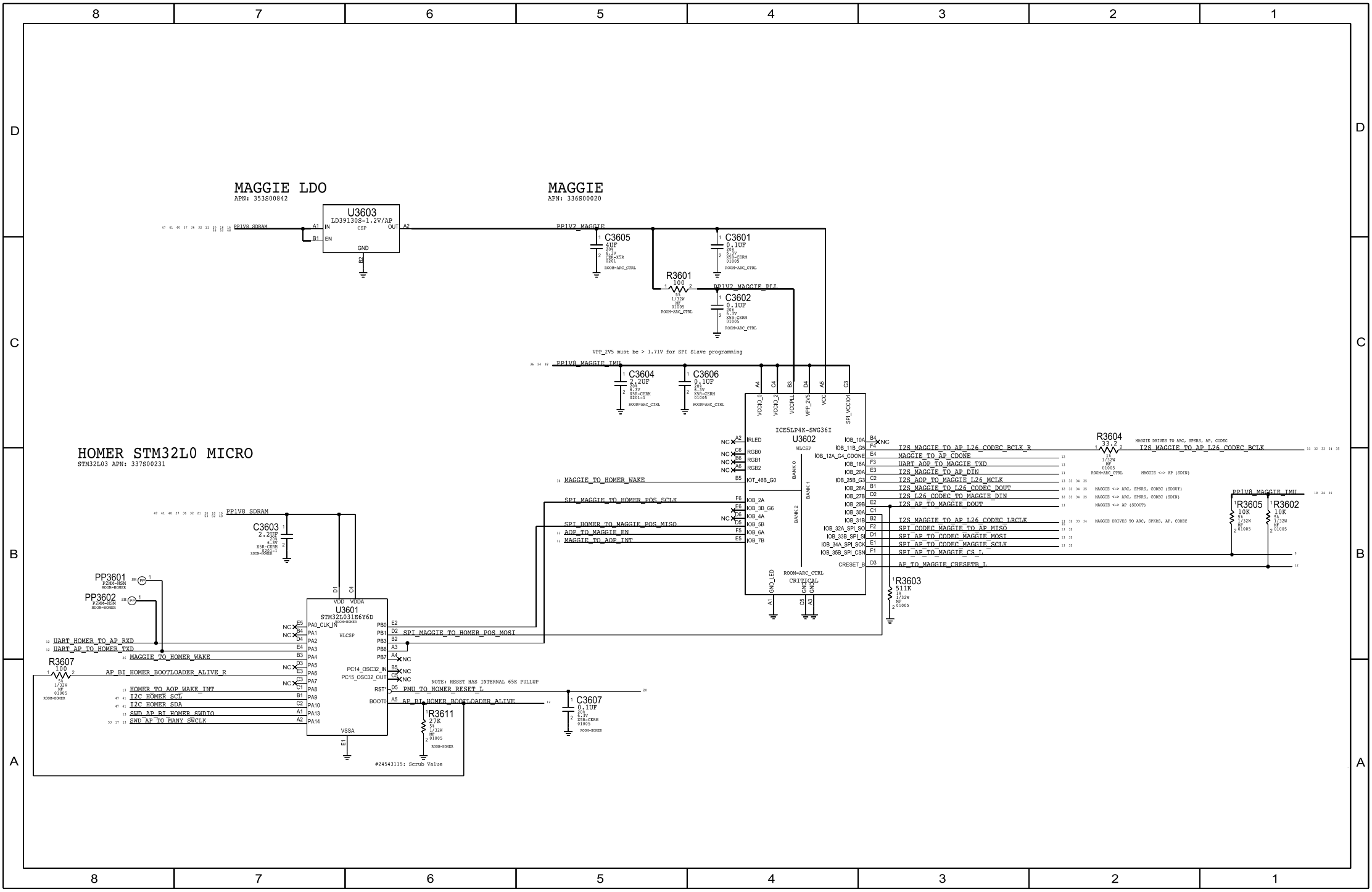
MAGGIE LDO
APN: 353S00842
U3603
LD39130S-1.2V/AP
PP1V8_SDRAM
PP1V2_MAGGIE
C3605
4UF
C3601
0.1UF
R3601
100
PP1V2_MAGGIE_PLL
C3602
0.1UF
MAGGIE
APN: 336S00020
VPP_2V5 must be > 1.71V for SPI Slave programming
PP1V8_MAGGIE_IMU
C3604
2.2UF
C3606
0.1UF
ICE5LP4K-SWG36I
U3602
HOMER STM32L0 MICRO
STM32L03 APN: 337S00231
C3603
2.2UF
PP3601
PP3602
U3601
STM32L031E6Y6D
UART_HOMER_TO_AP_RXD
UART_AP_TO_HOMER_TXD
MAGGIE_TO_HOMER_WAKE
AP_BI_HOMER_BOOTLOADER_ALIVE_R
R3607
100
HOMER_TO_AOP_WAKE_INT
I2C_HOMER_SCL
I2C_HOMER_SDA
SWD_AP_BI_HOMER_SWDIO
SWD_AP_TO_MANY_SWCLK
SPI_MAGGIE_TO_HOMER_POS_SCLK
SPI_HOMER_TO_MAGGIE_POS_MISO
AOP_TO_MAGGIE_EN
MAGGIE_TO_AOP_INT
SPI_MAGGIE_TO_HOMER_POS_MOSI
PMU_TO_HOMER_RESET_L
AP_BI_HOMER_BOOTLOADER_ALIVE
NOTE: RESET HAS INTERNAL 65K PULLUP
R3611
27K
C3607
0.1UF
#24543115: Scrub Value
R3603
511K
R3604
33.2
I2S_MAGGIE_TO_AP_L26_CODEC_BCLK_R
I2S_MAGGIE_TO_AP_L26_CODEC_BCLK
MAGGIE_TO_AP_CDONE
UART_AOP_TO_MAGGIE_TXD
I2S_MAGGIE_TO_AP_DIN
I2S_AOP_TO_MAGGIE_L26_MCLK
I2S_MAGGIE_TO_L26_CODEC_DOUT
I2S_L26_CODEC_TO_MAGGIE_DIN
I2S_AP_TO_MAGGIE_DOUT
I2S_MAGGIE_TO_AP_L26_CODEC_LRCLK
SPI_CODEC_MAGGIE_TO_AP_MISO
SPI_AP_TO_CODEC_MAGGIE_MOSI
SPI_AP_TO_CODEC_MAGGIE_SCLK
SPI_AP_TO_MAGGIE_CS_L
AP_TO_MAGGIE_CRESETB_L
R3605
10K
R3602
10K
PP1V8_MAGGIE_IMU

by kass

DISPLAY & TOUCH - POWER SUPPLIES

CHESTNUT DISPLAY PMU

APN:338S1172

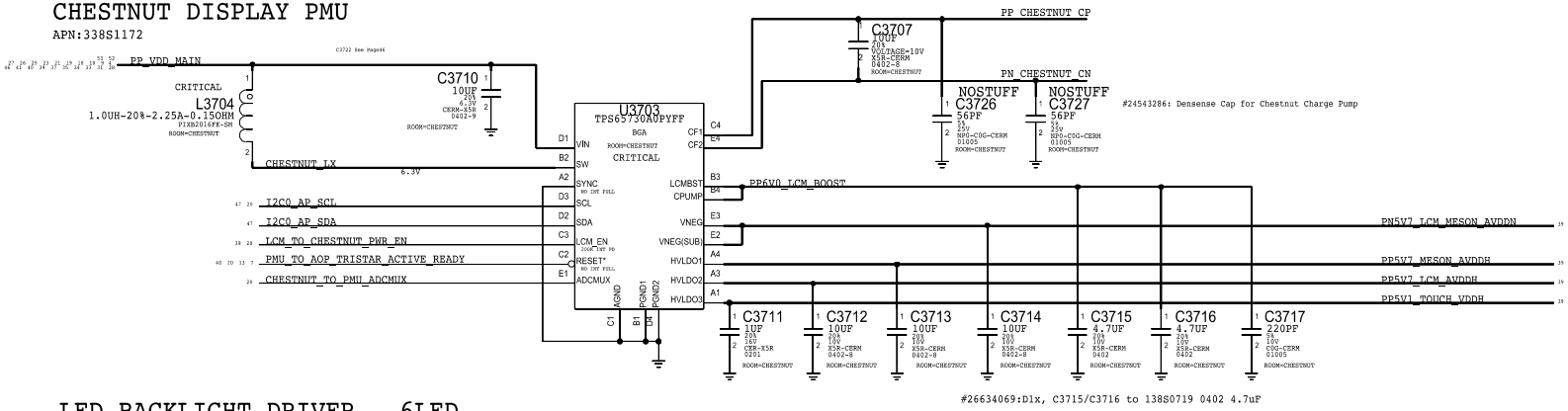

#26634069:D1x, C3715/C3716 to 138S0719 0402 4.7uF

LED BACKLIGHT DRIVER - 6LED

APN:353s00640

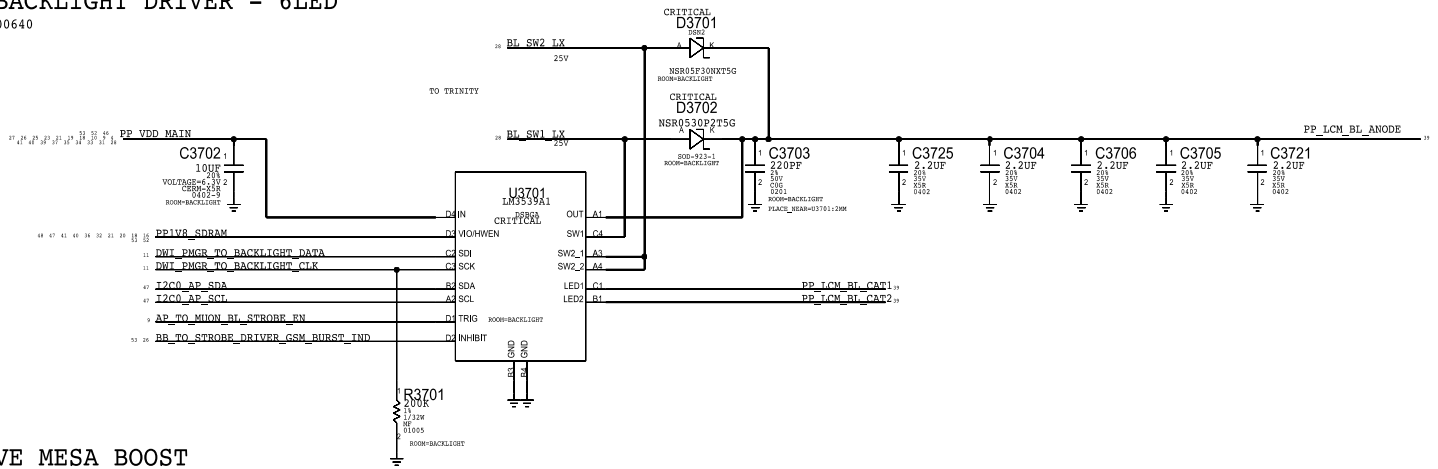

MOJAVE MESA BOOST

APN:353S00671

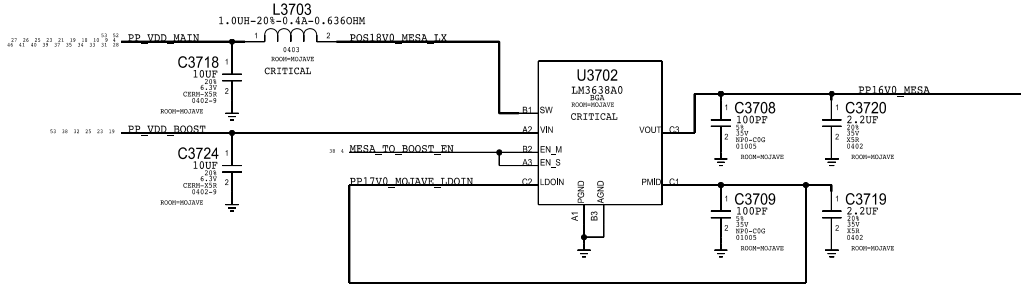

by kass

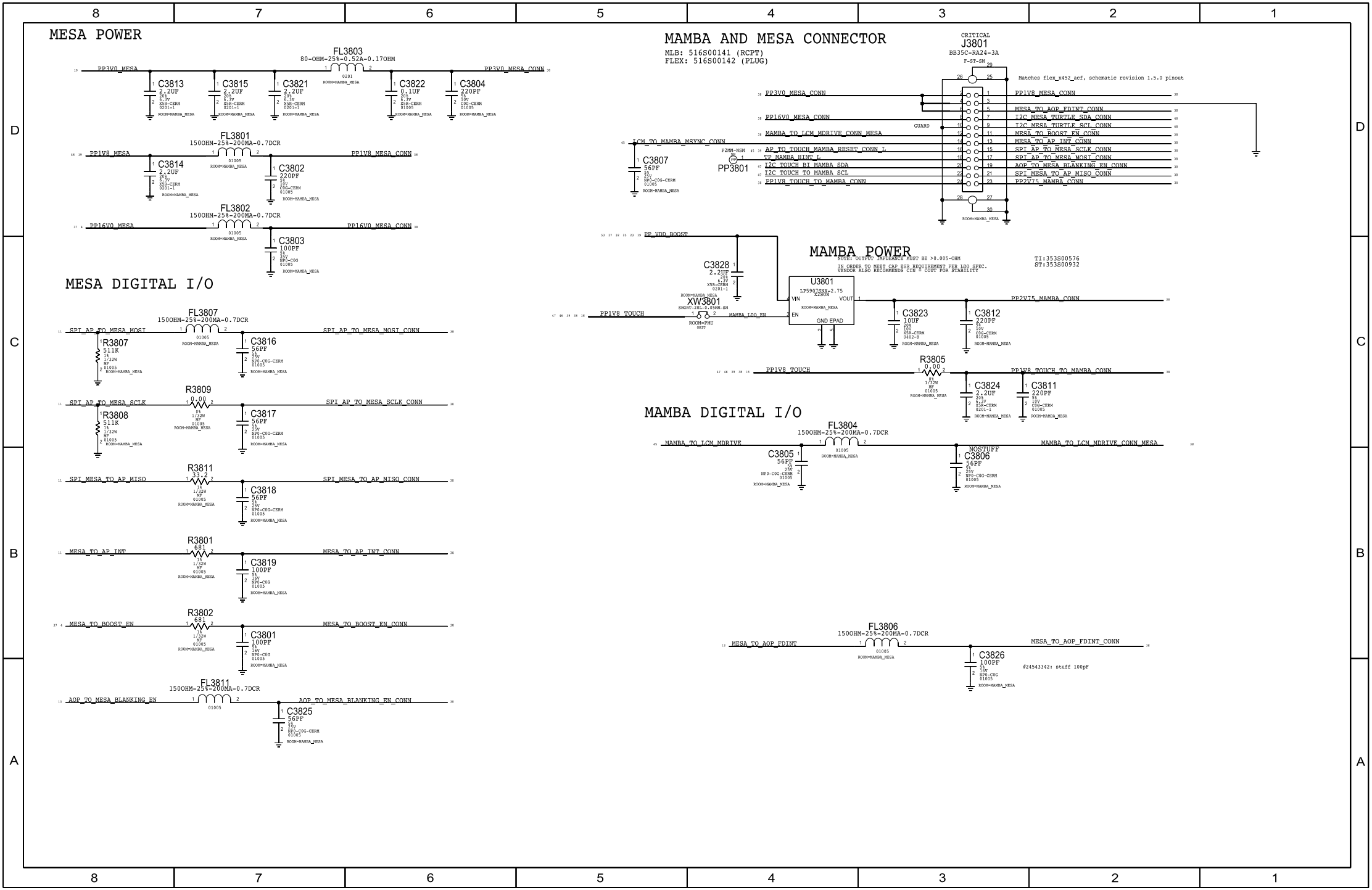
MESA POWER
FL3803
80-OHM-25%-0.52A-0.17OHM
PP3V0_MESA
PP3V0_MESA_CONN
C3813 2.2UF
C3815 2.2UF
C3821 2.2UF
C3822 0.1UF
C3804 220PF
FL3801
1500HM-25%-200MA-0.7DCR
PP1V8_MESA
PP1V8_MESA_CONN
C3814 2.2UF
C3802 220PF
FL3802
1500HM-25%-200MA-0.7DCR
PP16V0_MESA
PP16V0_MESA_CONN
C3803 100PF
MESA DIGITAL I/O
FL3807
1500HM-25%-200MA-0.7DCR
SPI_AP_TO_MESA_MOSI
SPI_AP_TO_MESA_MOSI_CONN
R3807 511K
C3816 56PF
R3809 0.00
SPI_AP_TO_MESA_SCLK
SPI_AP_TO_MESA_SCLK_CONN
R3808 511K
C3817 56PF
R3811 33.2
SPI_MESA_TO_AP_MISO
SPI_MESA_TO_AP_MISO_CONN
C3818 56PF
R3801 681
MESA_TO_AP_INT
MESA_TO_AP_INT_CONN
C3819 100PF
R3802 681
MESA_TO_BOOST_EN
MESA_TO_BOOST_EN_CONN
C3801 100PF
FL3811
1500HM-25%-200MA-0.7DCR
AOP_TO_MESA_BLANKING_EN
AOP_TO_MESA_BLANKING_EN_CONN
C3825 56PF
MAMBA AND MESA CONNECTOR
MLB: 516S00141 (RCPT)
FLEX: 516S00142 (PLUG)
CRITICAL
J3801
BB35C-RA24-3A
Matches flex_x452_acf, schematic revision 1.5.0 pinout
PP3V0_MESA_CONN
PP16V0_MESA_CONN
MAMBA_TO_LCM_MDRIVE_CONN_MESA
LCM_TO_MAMBA_MSYNC_CONN
C3807 56PF
PP3801
PP1V8_MESA_CONN
MESA_TO_AOP_FDINT_CONN
I2C_MESA_TURTLE_SDA_CONN
I2C_MESA_TURTLE_SCL_CONN
MESA_TO_BOOST_EN_CONN
MESA_TO_AP_INT_CONN
SPI_AP_TO_MESA_SCLK_CONN
SPI_AP_TO_MESA_MOSI_CONN
AOP_TO_MESA_BLANKING_EN_CONN
SPI_MESA_TO_AP_MISO_CONN
PP2V75_MAMBA_CONN
PP_VDD_BOOST
C3828 2.2UF
XW3801
PP1V8_TOUCH
MAMBA_LDO_EN
MAMBA POWER
NOTE: OUTPUT IMPEDANCE MUST BE >0.005-OHM
IN ORDER TO MEET CAP ESR REQUIREMENT PER LDO SPEC.
VENDOR ALSO RECOMMENDS CIN = COUT FOR STABILITY
TI:353S00576
ST:353S00932
U3801
LP5907SNX-2.75
X2SON
VIN
VOUT
EN
GND EPAD
PP2V75_MAMBA_CONN
C3823 10UF
C3812 220PF
R3805 0.00
PP1V8_TOUCH
PP1V8_TOUCH_TO_MAMBA_CONN
C3824 2.2UF
C3811 220PF
MAMBA DIGITAL I/O
FL3804
1500HM-25%-200MA-0.7DCR
MAMBA_TO_LCM_MDRIVE
MAMBA_TO_LCM_MDRIVE_CONN_MESA
C3805 56PF
NOSTUFF
C3806 56PF
FL3806
1500HM-25%-200MA-0.7DCR
MESA_TO_AOP_FDINT
MESA_TO_AOP_FDINT_CONN
C3826 100PF
#24543342: stuff 100pF

by kass

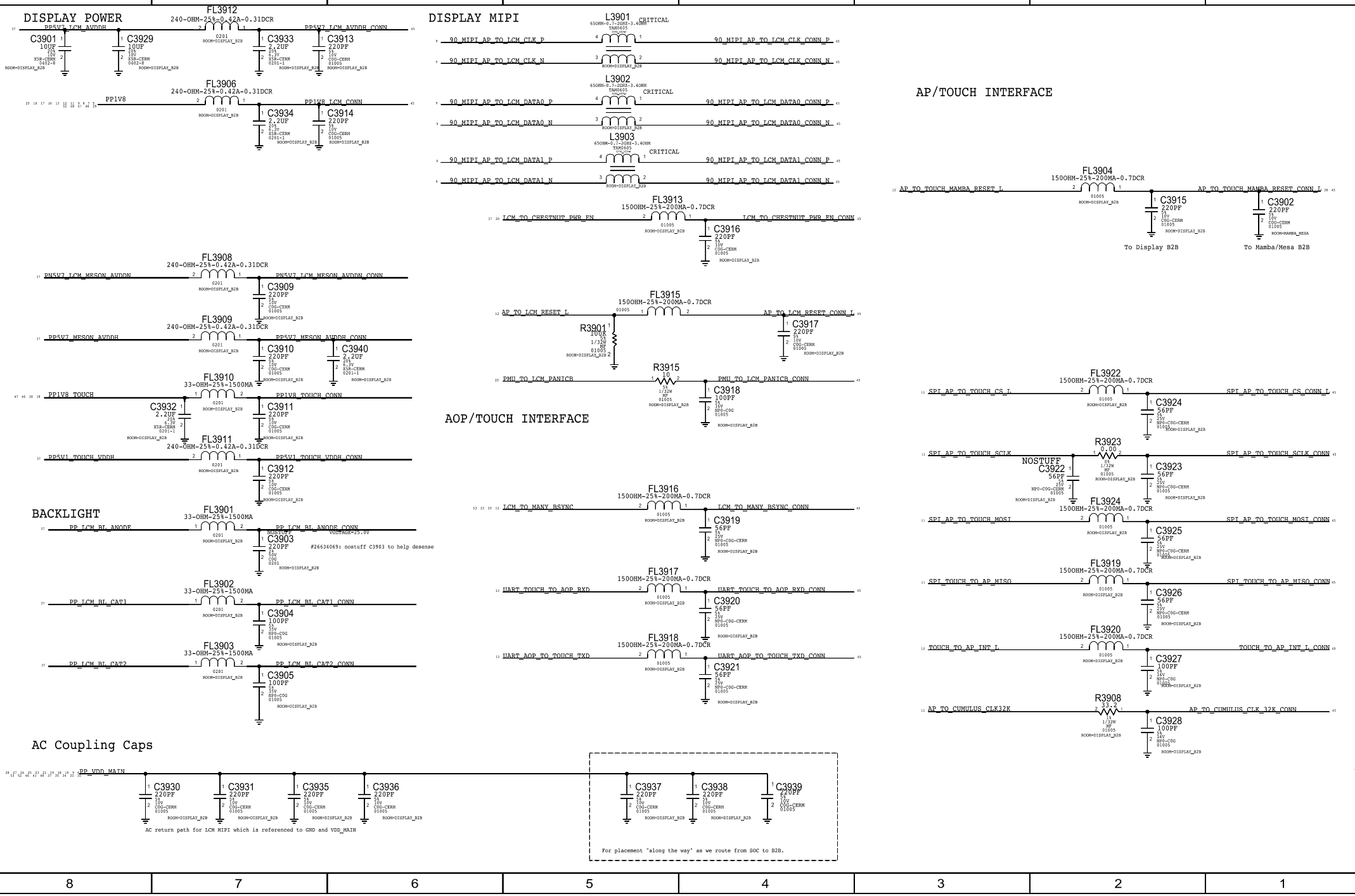
DISPLAY POWER
PP5V7_LCM_AVDDH
FL3912
240-OHM-25%-0.42A-0.31DCR
PP5V7_LCM_AVDDH_CONN
C3901 10UF
C3929 10UF
C3933 2.2UF
C3913 220PF
FL3906
240-OHM-25%-0.42A-0.31DCR
PP1V8
PP1V8_LCM_CONN
C3934 2.2UF
C3914 220PF
FL3908
240-OHM-25%-0.42A-0.31DCR
PN5V7_LCM_MESON_AVDDN
PN5V7_LCM_MESON_AVDDN_CONN
C3909 220PF
FL3909
240-OHM-25%-0.42A-0.31DCR
PP5V7_MESON_AVDDH
PP5V7_MESON_AVDDH_CONN
C3910 220PF
C3940 2.2UF
FL3910
33-OHM-25%-1500MA
PP1V8_TOUCH
PP1V8_TOUCH_CONN
C3932 2.2UF
C3911 220PF
FL3911
240-OHM-25%-0.42A-0.31DCR
PP5V1_TOUCH_VDDH
PP5V1_TOUCH_VDDH_CONN
C3912 220PF
BACKLIGHT
FL3901
33-OHM-25%-1500MA
PP_LCM_BL_ANODE
PP_LCM_BL_ANODE_CONN
VOLTAGE=25.0V
C3903 220PF
#26634069: nostuff C3903 to help desense
FL3902
33-OHM-25%-1500MA
PP_LCM_BL_CAT1
PP_LCM_BL_CAT1_CONN
C3904 100PF
FL3903
33-OHM-25%-1500MA
PP_LCM_BL_CAT2
PP_LCM_BL_CAT2_CONN
C3905 100PF
AC Coupling Caps
PP_VDD_MAIN
C3930 220PF
C3931 220PF
C3935 220PF
C3936 220PF
AC return path for LCM MIPI which is referenced to GND and VDD_MAIN
C3937 220PF
C3938 220PF
C3939 220PF
For placement "along the way" as we route from SOC to B2B.
DISPLAY MIPI
L3901 CRITICAL
90_MIPI_AP_TO_LCM_CLK_P
90_MIPI_AP_TO_LCM_CLK_P_CONN
90_MIPI_AP_TO_LCM_CLK_N
90_MIPI_AP_TO_LCM_CLK_N_CONN
L3902 CRITICAL
90_MIPI_AP_TO_LCM_DATA0_P
90_MIPI_AP_TO_LCM_DATA0_P_CONN
90_MIPI_AP_TO_LCM_DATA0_N
90_MIPI_AP_TO_LCM_DATA0_N_CONN
L3903 CRITICAL
90_MIPI_AP_TO_LCM_DATA1_P
90_MIPI_AP_TO_LCM_DATA1_P_CONN
90_MIPI_AP_TO_LCM_DATA1_N
90_MIPI_AP_TO_LCM_DATA1_N_CONN
FL3913
150OHM-25%-200MA-0.7DCR
LCM_TO_CHESTNUT_PWR_EN
LCM_TO_CHESTNUT_PWR_EN_CONN
C3916 220PF
FL3915
150OHM-25%-200MA-0.7DCR
AP_TO_LCM_RESET_L
AP_TO_LCM_RESET_CONN_L
R3901 10K
C3917 220PF
R3915 10
PMU_TO_LCM_PANICB
PMU_TO_LCM_PANICB_CONN
C3918 100PF
AOP/TOUCH INTERFACE
FL3916
150OHM-25%-200MA-0.7DCR
LCM_TO_MANY_BSYNC
LCM_TO_MANY_BSYNC_CONN
C3919 56PF
FL3917
150OHM-25%-200MA-0.7DCR
UART_TOUCH_TO_AOP_RXD
UART_TOUCH_TO_AOP_RXD_CONN
C3920 56PF
FL3918
150OHM-25%-200MA-0.7DCR
UART_AOP_TO_TOUCH_TXD
UART_AOP_TO_TOUCH_TXD_CONN
C3921 56PF
AP/TOUCH INTERFACE
FL3904
150OHM-25%-200MA-0.7DCR
AP_TO_TOUCH_MAMBA_RESET_L
AP_TO_TOUCH_MAMBA_RESET_CONN_L
C3915 220PF
C3902 220PF
To Display B2B
To Mamba/Mesa B2B
FL3922
150OHM-25%-200MA-0.7DCR
SPI_AP_TO_TOUCH_CS_L
SPI_AP_TO_TOUCH_CS_CONN_L
C3924 56PF
R3923 0.00
SPI_AP_TO_TOUCH_SCLK
SPI_AP_TO_TOUCH_SCLK_CONN
NOSTUFF
C3922 56PF
C3923 56PF
FL3924
150OHM-25%-200MA-0.7DCR
SPI_AP_TO_TOUCH_MOSI
SPI_AP_TO_TOUCH_MOSI_CONN
C3925 56PF
FL3919
150OHM-25%-200MA-0.7DCR
SPI_TOUCH_TO_AP_MISO
SPI_TOUCH_TO_AP_MISO_CONN
C3926 56PF
FL3920
150OHM-25%-200MA-0.7DCR
TOUCH_TO_AP_INT_L
TOUCH_TO_AP_INT_L_CONN
C3927 100PF
R3908 33.2
AP_TO_CUMULUS_CLK32K
AP_TO_CUMULUS_CLK_32K_CONN
C3928 100PF

by kass

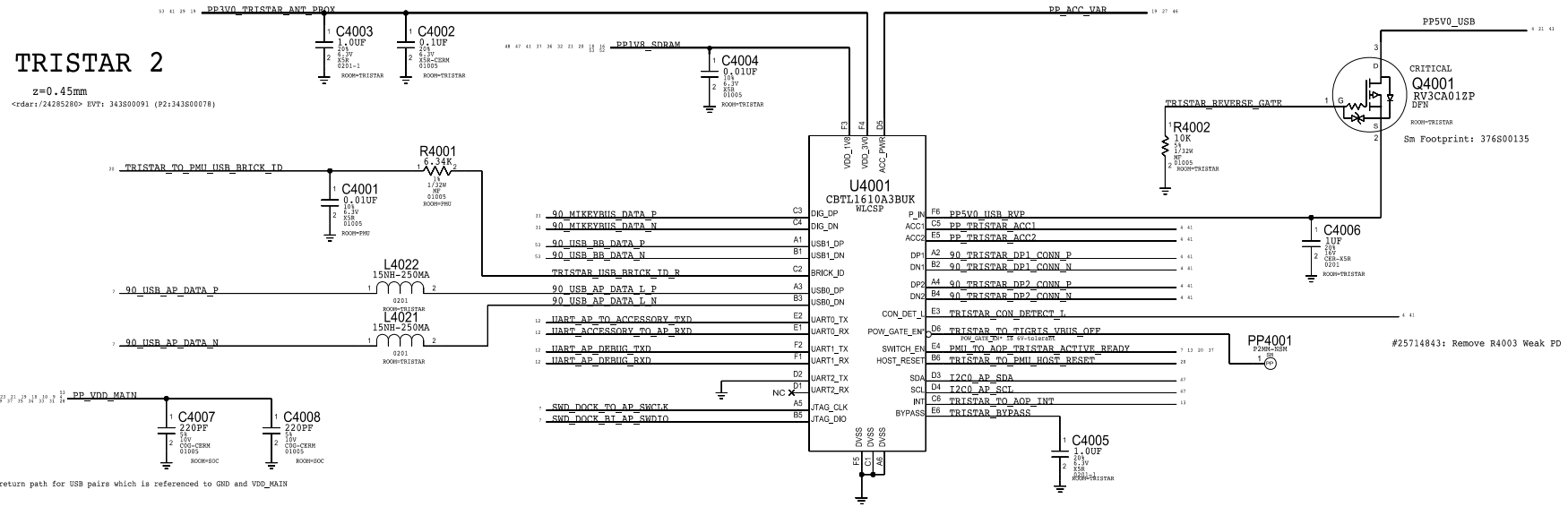
TRISTAR 2
z=0.45mm
<rdar://24285280> EVT: 343S00091 (P2:343S00078)
PP3V0_TRISTAR_ANT_PROX
C4003
1.0UF
C4002
0.1UF
PP1V8_SDRAM
C4004
0.01UF
PP_ACC_VAR
PP5V0_USB
CRITICAL
Q4001
RV3CA01ZP
DFN
Sm Footprint: 376S00135
TRISTAR_REVERSE_GATE
R4002
10K
R4001
6.34K
TRISTAR_TO_PMU_USB_BRICK_ID
C4001
0.01UF
U4001
CBTL1610A3BUK
WLCSP
C4006
1UF
L4022
15NH-250MA
L4021
15NH-250MA
90_USB_AP_DATA_P
90_USB_AP_DATA_N
90_MIKEYBUS_DATA_P
90_MIKEYBUS_DATA_N
90_USB_BB_DATA_P
90_USB_BB_DATA_N
TRISTAR_USB_BRICK_ID_R
90_USB_AP_DATA_L_P
90_USB_AP_DATA_L_N
UART_AP_TO_ACCESSORY_TXD
UART_ACCESSORY_TO_AP_RXD
UART_AP_DEBUG_TXD
UART_AP_DEBUG_RXD
SWD_DOCK_TO_AP_SWCLK
SWD_DOCK_BI_AP_SWDIO
PP5V0_USB_RVP
PP_TRISTAR_ACC1
PP_TRISTAR_ACC2
90_TRISTAR_DP1_CONN_P
90_TRISTAR_DP1_CONN_N
90_TRISTAR_DP2_CONN_P
90_TRISTAR_DP2_CONN_N
TRISTAR_CON_DETECT_L
TRISTAR_TO_TIGRIS_VBUS_OFF
PMU_TO_AOP_TRISTAR_ACTIVE_READY
TRISTAR_TO_PMU_HOST_RESET
I2C0_AP_SDA
I2C0_AP_SCL
TRISTAR_TO_AOP_INT
TRISTAR_BYPASS
PP4001
C4005
1.0UF
PP_VDD_MAIN
C4007
220PF
C4008
220PF
AC return path for USB pairs which is referenced to GND and VDD_MAIN
#25714843: Remove R4003 Weak PD

by kass

ANTENNA

Please loop in Matt Mow (Antenna Team)
when changing these components!

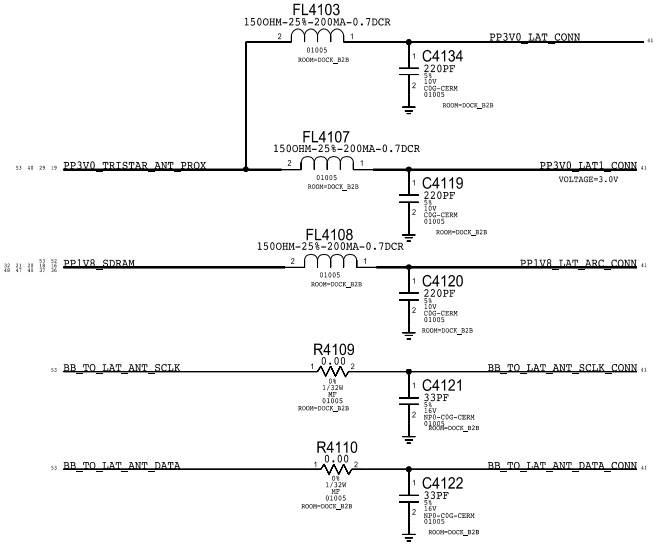

ARC CONTROL

#26118161: Update FL4104 to 49.9ohm

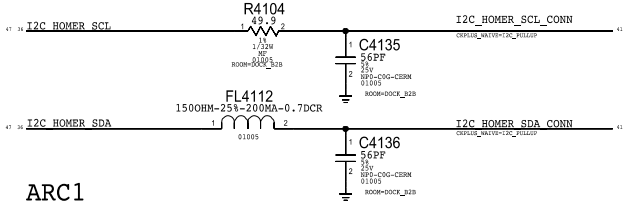

ARC1

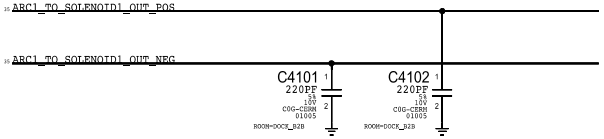

Antenna GPIO

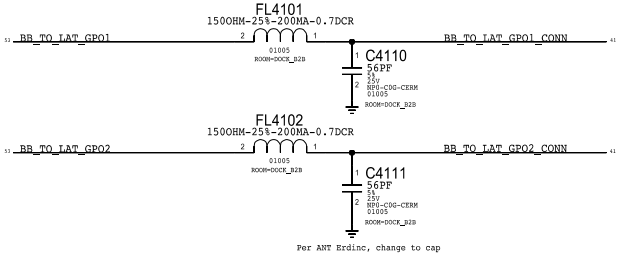

Per ANT Erdinc, change to cap

LOWER MIC1/4

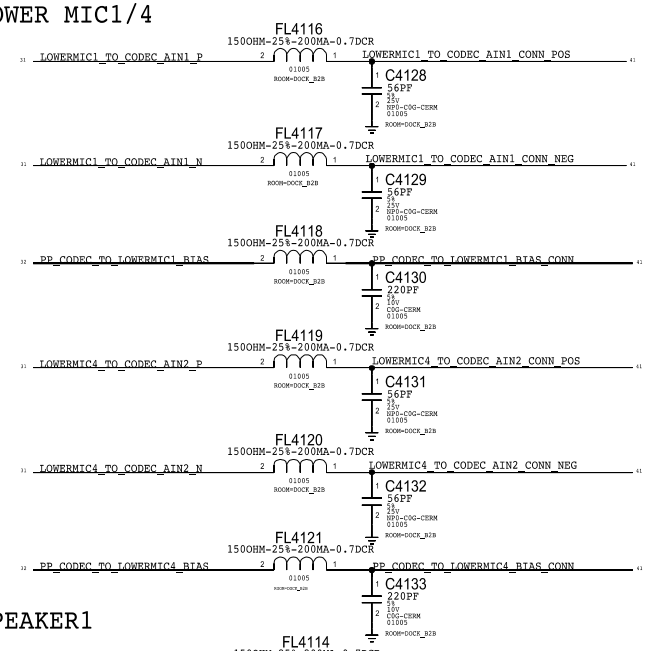

SPEAKER1

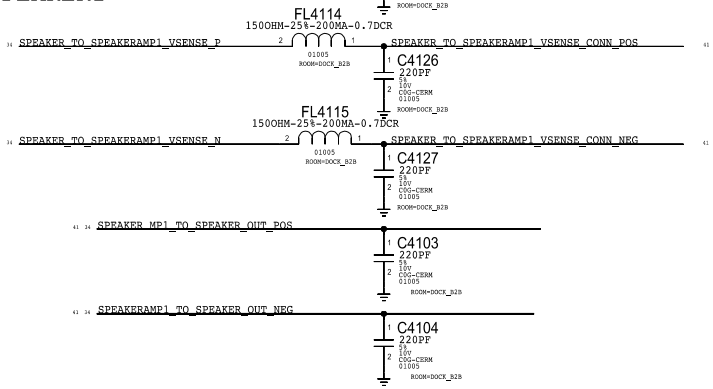

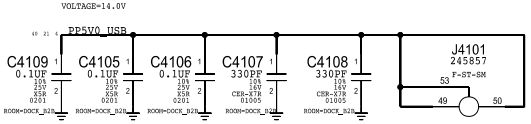

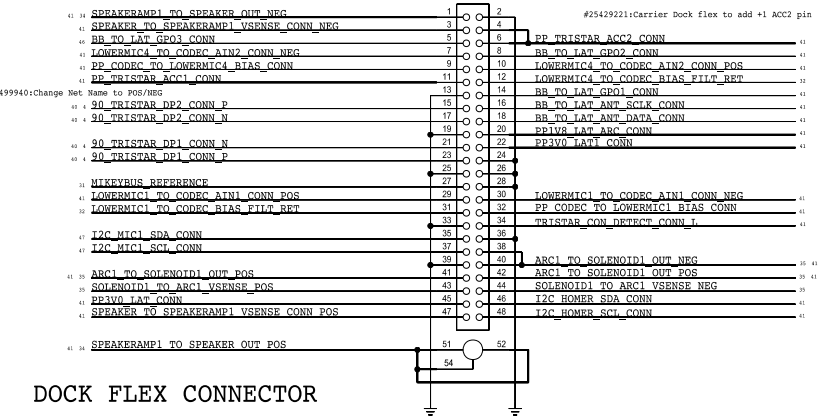

DOCK FLEX CONNECTOR

TRISTAR

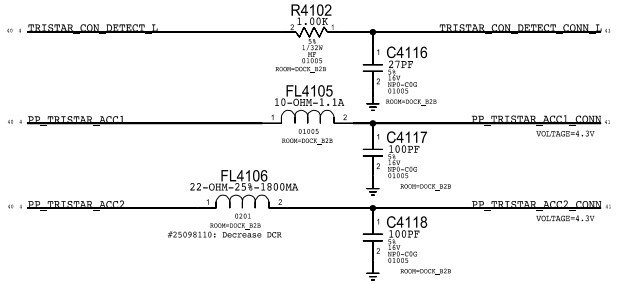

USB AC Coupling

AC return path for USB pairs which is referenced to GND and VDD_MAIN

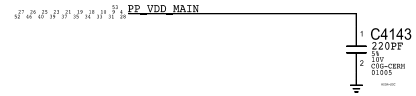

by kass

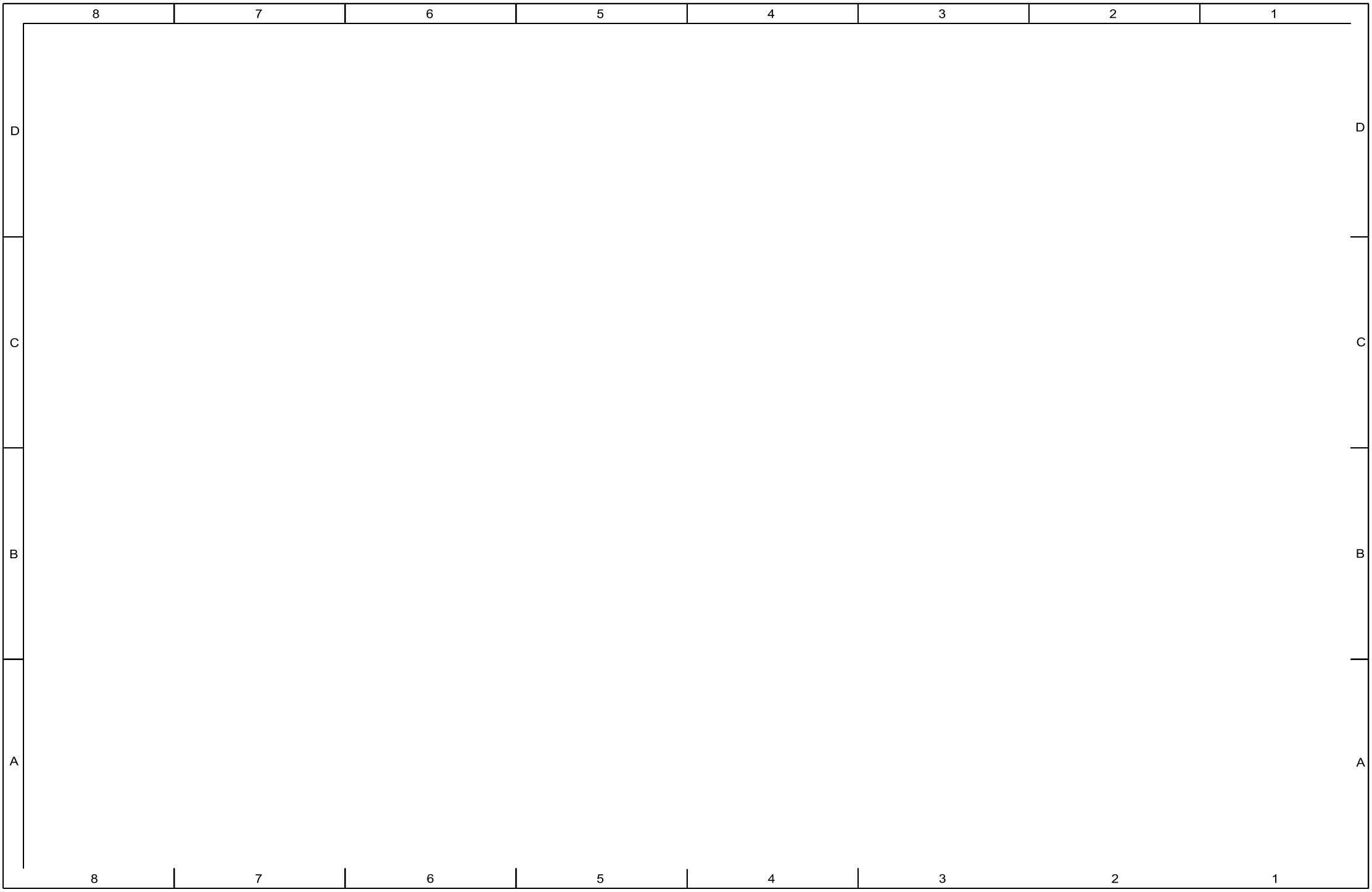

by kass

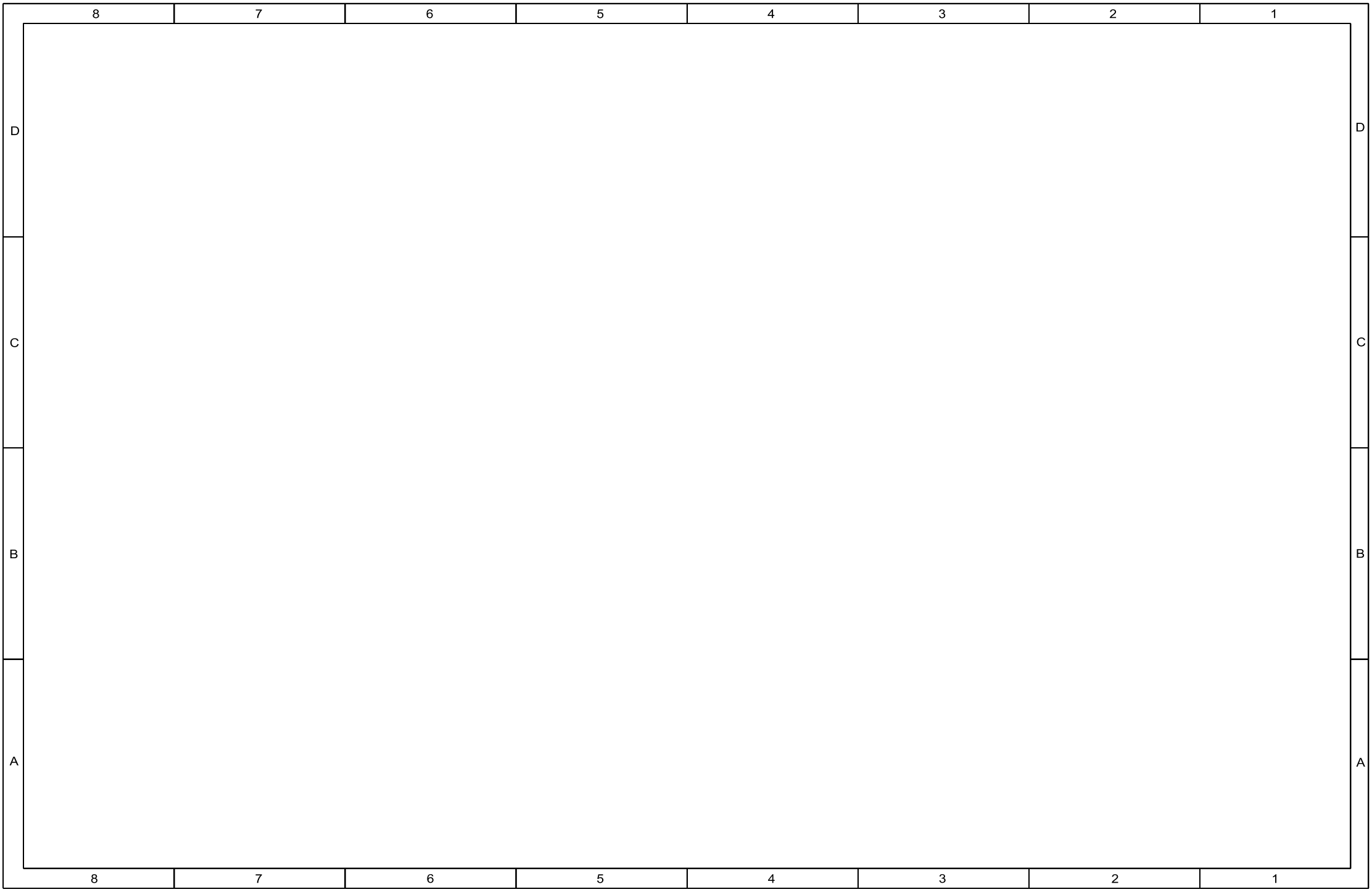

by kass

STROBE1

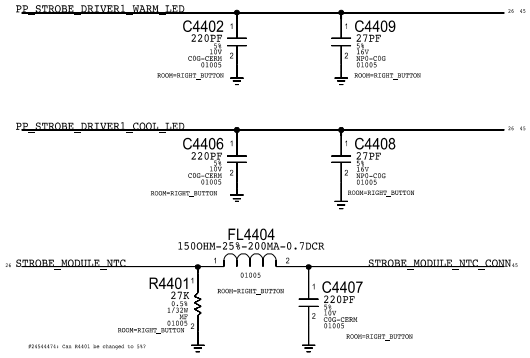

STROBE2

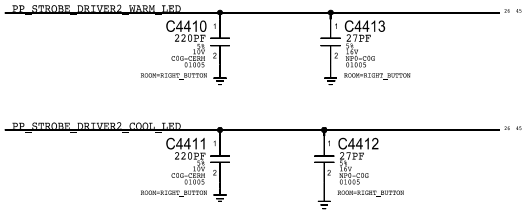

BUTTONS

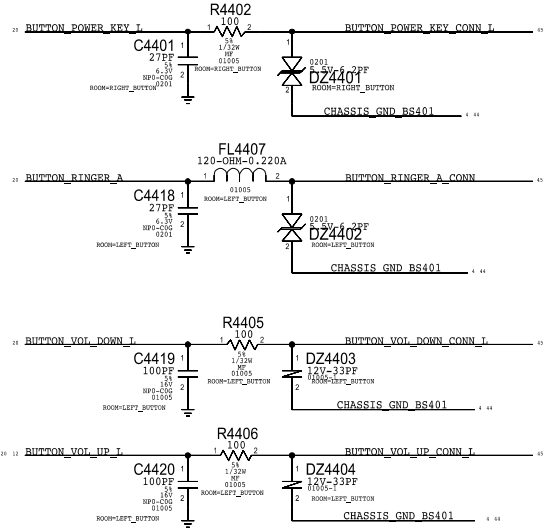

HAWKING

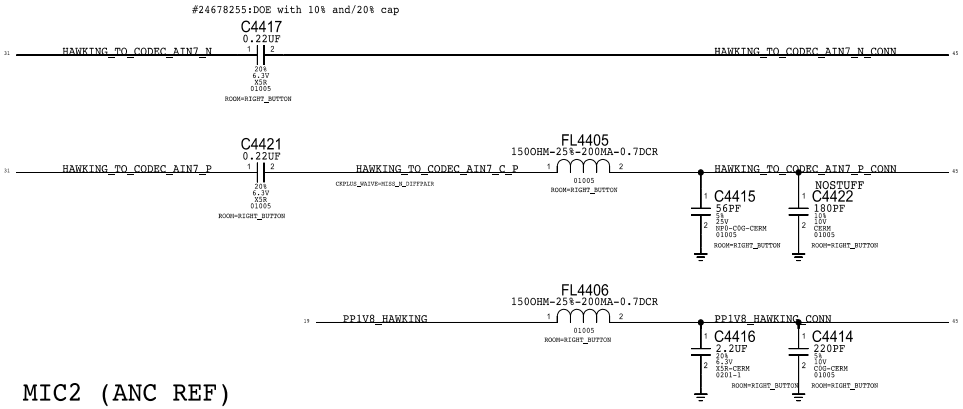

MIC2 (ANC REF)

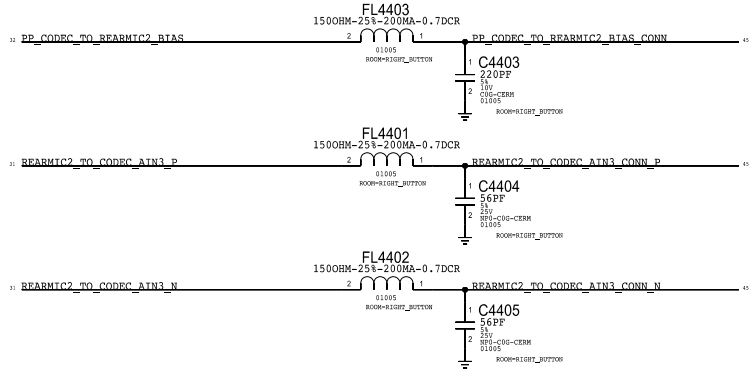

by kass

UTAH-C FLEX CONNECTOR

THIS PAGE UNIQUE TO SMALL FORM FACTOR

THIS ONE ---> 516S00152 RCPT (USED ON MLB)
516S00151 PLUG

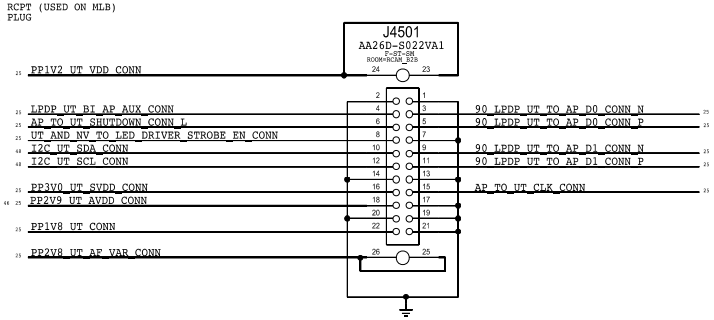

COMBINED BUTTON FLEX CONNECTOR

MLB APN: 516S00150
FLEX APN: 516S00149

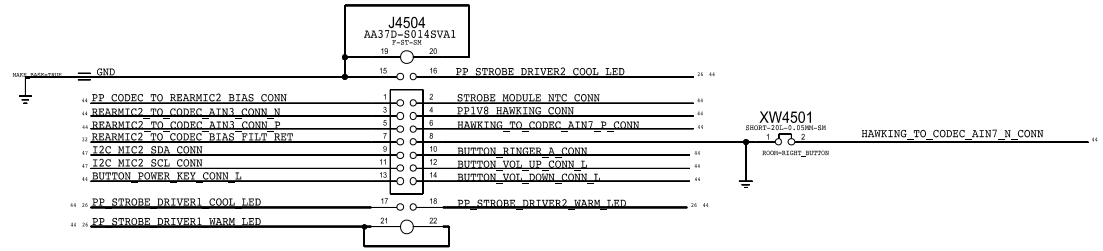

DISPLAY / TOUCH FLEX CONNECTOR

THIS ONE ---> 516S00138 RCPT (USED ON MLB)
516S00137 PLUG

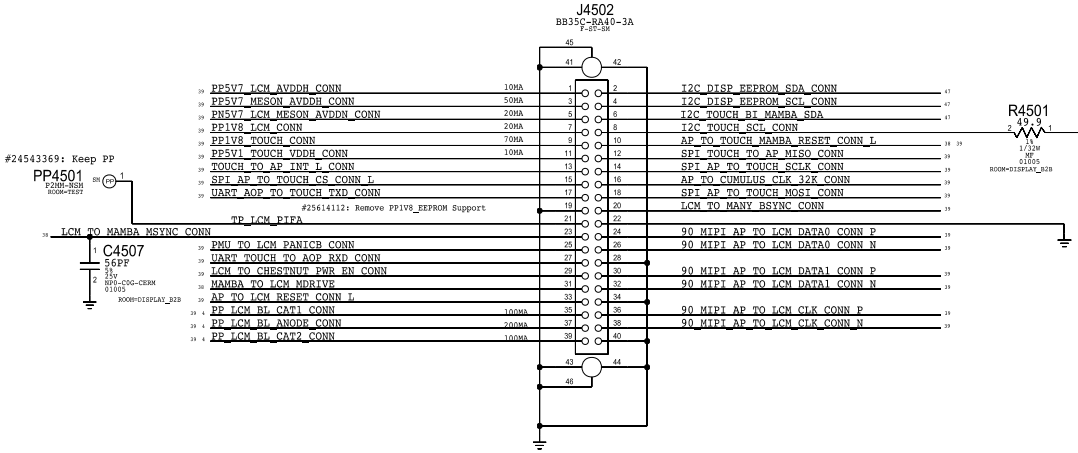

FOREHEAD FLEX CONNECTOR

THIS ONE ---> 516S00146 RCPT (USED ON MLB)
516S00145 PLUG

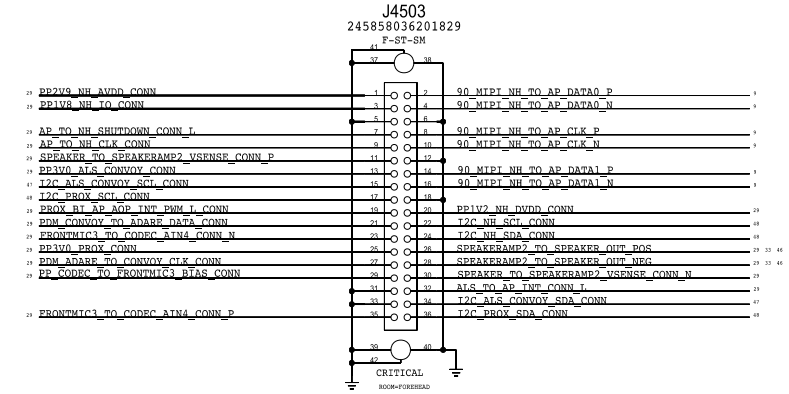

by kass

THIS PAGE UNIQUE TO SMALL FORM FACTOR

OTHER SMALL FORM FACTOR SPECIFIC PAGES:

4 - MECHANICAL

ISP I2C1

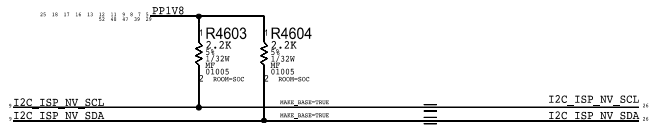

#26682438:Move to Page 46

TOUCH I2C

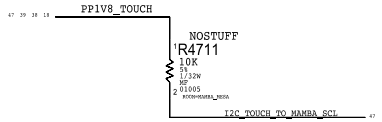

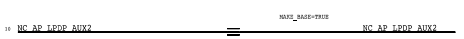

NC Nets in Small FF

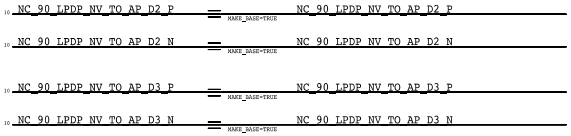

UT B2B

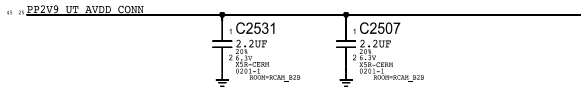

VDD_MAIN Cap

#26634069:D10x Only, 5x VDD_MAIN CAPS Change to 10UF/10V

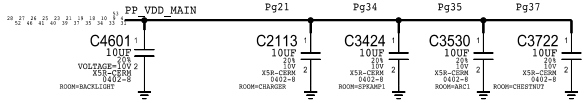

Top Speaker Compass Coil

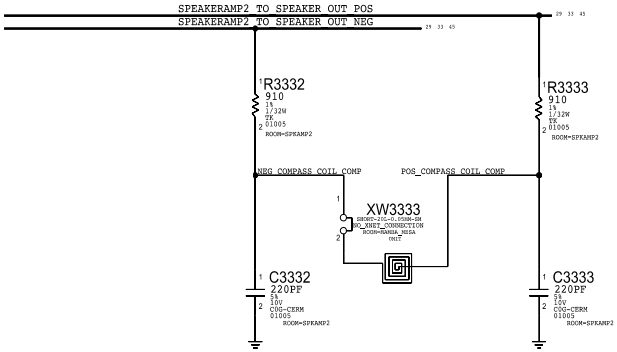

#25742582,Add back C3531 in layout at ARC

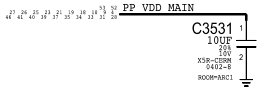

#26104509:C3525 Change to 1UF 0201 in DVT

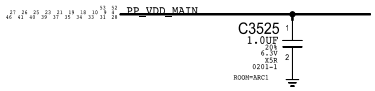

Dock B2B (Pg 41)

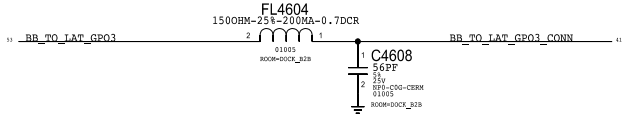

ACC Buck Caps

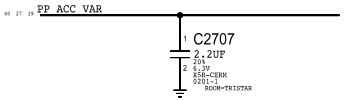

by kass

AP

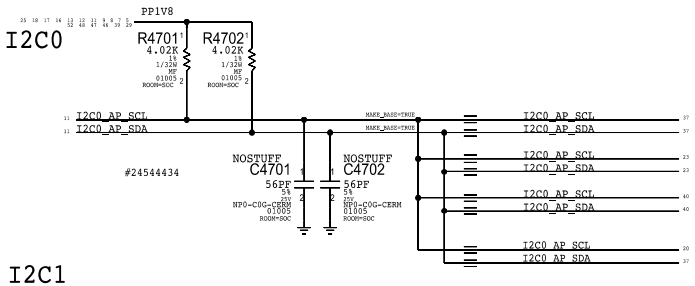

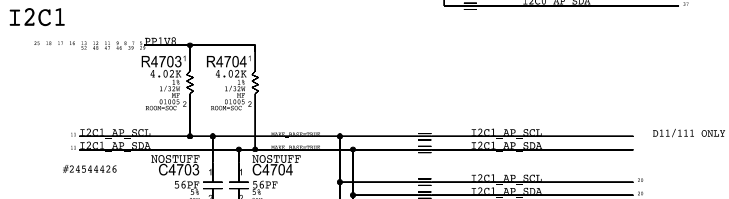

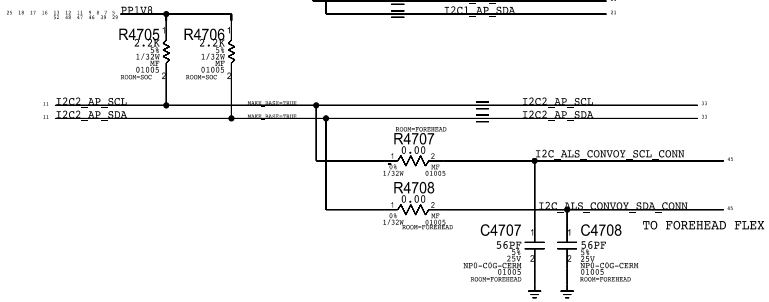

TOUCH

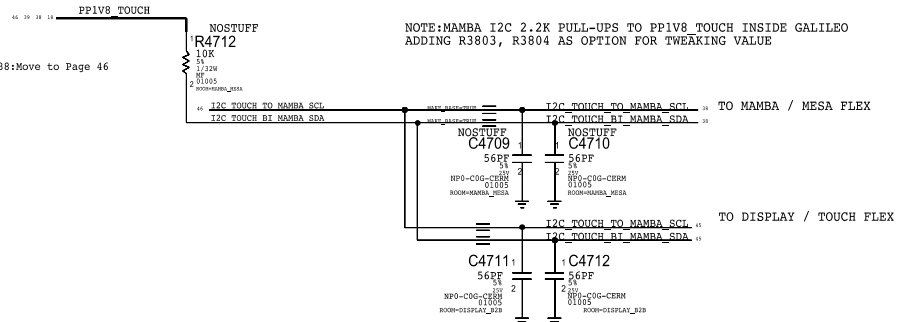

HOMER

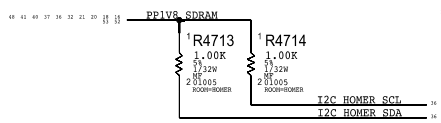

I2C5

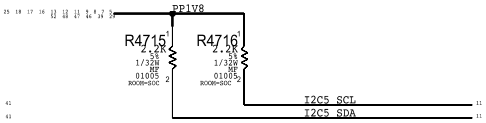

I2C3

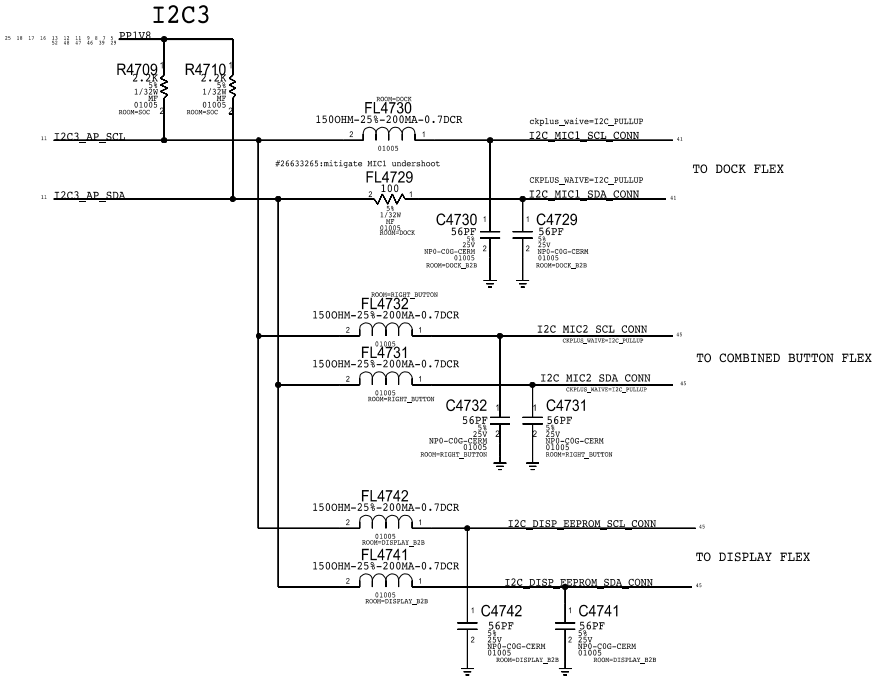

by kass

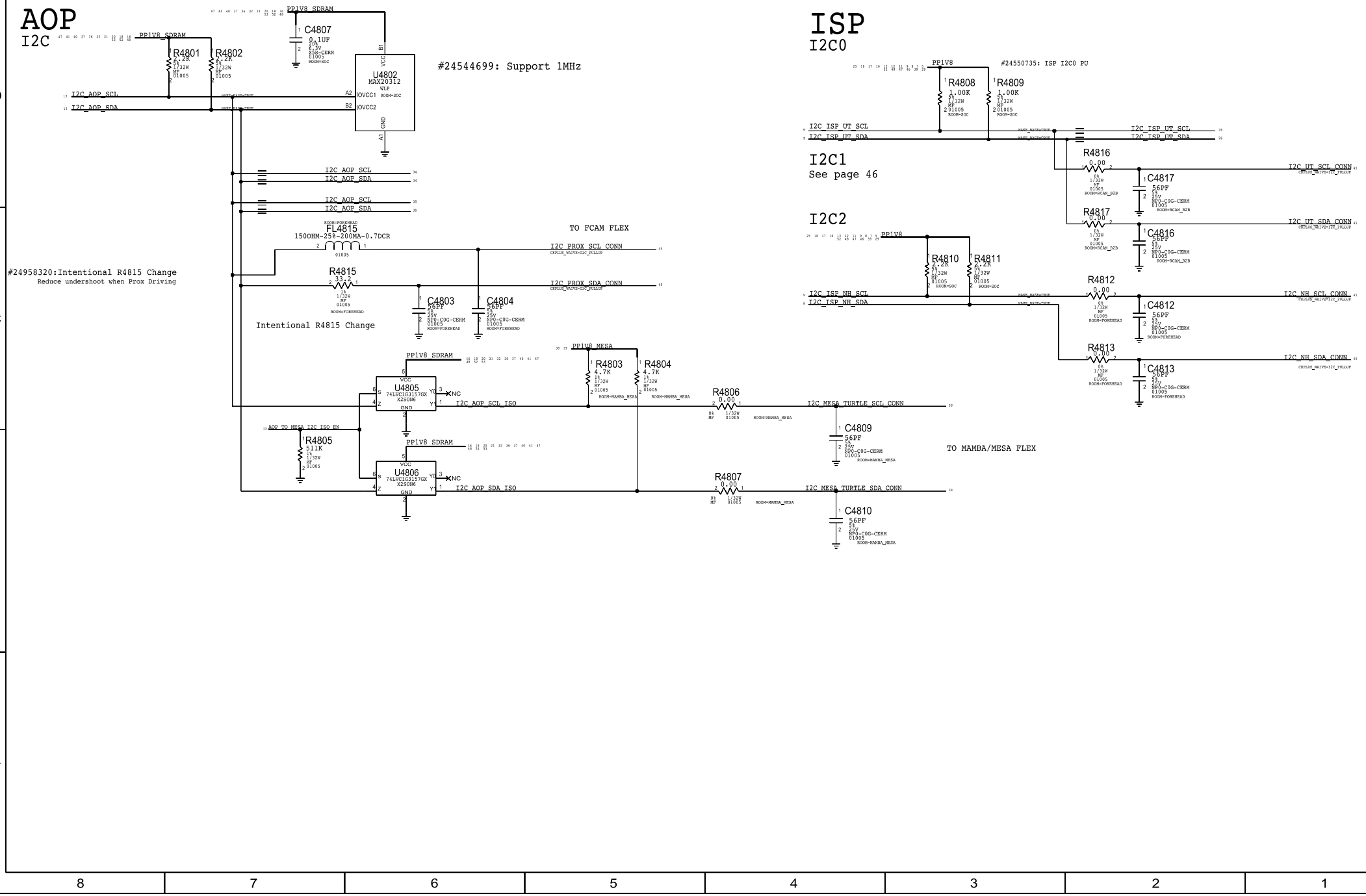
AOP
I2C
PP1V8_SDRAM
C4807
0.1UF
U4802
MAX20312
WLP
I2C_AOP_SCL
I2C_AOP_SDA
R4801
2.2K
R4802
2.2K
#24544699: Support 1MHz
TO FCAM FLEX
FL4815
150OHM-25%-200MA-0.7DCR
R4815
33.2
I2C_PROX_SCL_CONN
I2C_PROX_SDA_CONN
C4803
56PF
C4804
56PF
#24958320:Intentional R4815 Change
Reduce undershoot when Prox Driving
Intentional R4815 Change
PP1V8_MESA
R4803
4.7K
R4804
4.7K
U4805
74LVC1G157GX
U4806
74LVC1G3157GX
AOP_TO_MESA_I2C_ISO_EN
R4805
511K
I2C_AOP_SCL_ISO
I2C_AOP_SDA_ISO
R4806
0.00
R4807
0.00
I2C_MESA_TURTLE_SCL_CONN
I2C_MESA_TURTLE_SDA_CONN
C4809
56PF
C4810
56PF
TO MAMBA/MESA FLEX
ISP
I2C0
PP1V8
#24550735: ISP I2C0 PU
R4808
1.00K
R4809
1.00K
I2C_ISP_UT_SCL
I2C_ISP_UT_SDA
I2C1
See page 46
I2C2
R4810
2.2K
R4811
2.2K
I2C_ISP_NH_SCL
I2C_ISP_NH_SDA
R4816
0.00
R4817
0.00
R4812
0.00
R4813
0.00
C4817
56PF
C4816
56PF
C4812
56PF
C4813
56PF
I2C_UT_SCL_CONN
I2C_UT_SDA_CONN
I2C_NH_SCL_CONN
I2C_NH_SDA_CONN

by kass

D1x I2C Table

Bus	Device	Binary	7-bit Address	8-bit Address	Max Speed
ISP I2C0 *1MHz*	SALT LAKE (PRIMARY)	0010000X	0x10	0x20	1 MHz
	SALT LAKE (SECONDARY)	0110000X	0x30	0x60	1 MHz
	GRUNBERG (STANDARD)	0011100X	0x1C	0x38	1 MHz
	GRUNBERG (SPECIAL ABSOLUTE R/W)	0011101X	0x1D	0x3A	1 MHz
	GRUNBERG (SPECIAL DELTA READ)	0011110X	0x1E	0x3C	1 MHz
	STROBE 1	1100011X	0x63	0xC6	1 MHz
ISP I2C1 *1MHz*	LAS VEGAS (PRIMARY)	0100000X	0x20	0x40	1 MHz
	LAS VEGAS (SECONDARY)	0110000X	0x30	0x60	1 MHz
	EDWIN	1100011X	0x63	0xC6	400 kHz
	STROBE 2	0000110X	0x06	0x0C	1 MHz
ISP I2C2 *400kHz*	CONCORD	0010000X	0x10	0x20	1 MHz
ACP I2C *1MHz*	ARC DRIVER 1	100000YX	0x41	0x82	1 MHz
	PROX	1011000X	0x58	0xB0	1 MHz
	SPKAMP1 (L26)	100000YX	0x40	0x80	1 MHz
	TURTLE	0101100X	0x2c	0x58	400 kHz
	MESA	1100001X	0x61	0xC2	400 kHz
Touch I2C *600kHz*	MAMBA	1100000X	0x60	0xC0	1 MHz
	MESON	1000000X	0x40	0x80	510 kHz
EEPROM I2C	EEPROM	1010001X	0x51	0xA2	400 kHz
AP I2C0 *400kHz*	BOOST	1110101X	0x75	0xEA	3.4 MHz
	TRISTAR	0011010X	0x1A	0x34	400 kHz
	BACKLIGHT 1	1100010X	0x62	0xC4	1 MHz
	CHESTNUT	0100111X	0x27	0x4E	400 kHz
AP I2C1 *400kHz*	ADELYN	1110100X	0x74	0xE8	400 kHz
	TIGRIS	1110101X	0x75	0xEA	400 kHz
	BACKLIGHT 2	1100010X	0x62	0xC4	1 MHz
AP I2C2 *400kHz*	ALS	0101001X	0x29	0x52	400 kHz
	CONVOY	0100001X	0x21	0x42	3.4 MHz
		0100010X	0x22	0x44	400 kHz
	SPKAMP 2 (L26)	100002YX	0x40	0x80	400 MHz
AP I2C3 *100kHz*	DOCK FLEX (MIC1)	1010100X	0x54	0xA8	1 MHz
	COMBINED BUTTON FLEX (MIC2)	1010100X	0x56	0xAC	1 MHz
	DISP EEPROM	1010001X	0x51	0xA2	400kHz
Homer I2C *1MHz*	SCHRODINGER (STANDARD)	0001110X	0xE	0x1C	1 MHz
	SCHRODINGER (CAL REG'S)	0001111X	0xF	0x1D	1 MHz
	EEPROM (STANDARD)	1010000X	0x50	0xA0	
	EEPROM (CONFIG)	1010000X	0x50	0xA0	

by kass

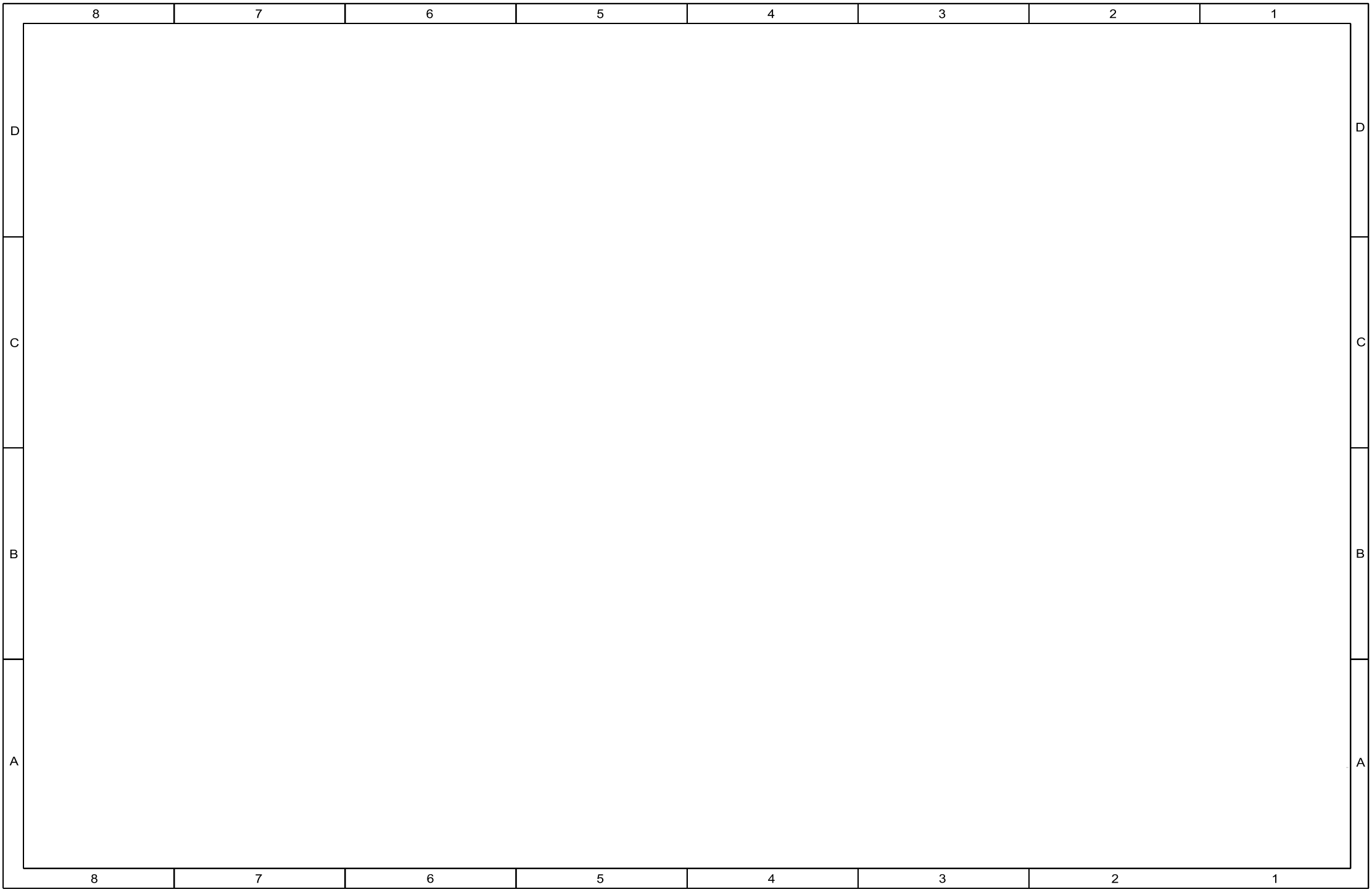

by kass

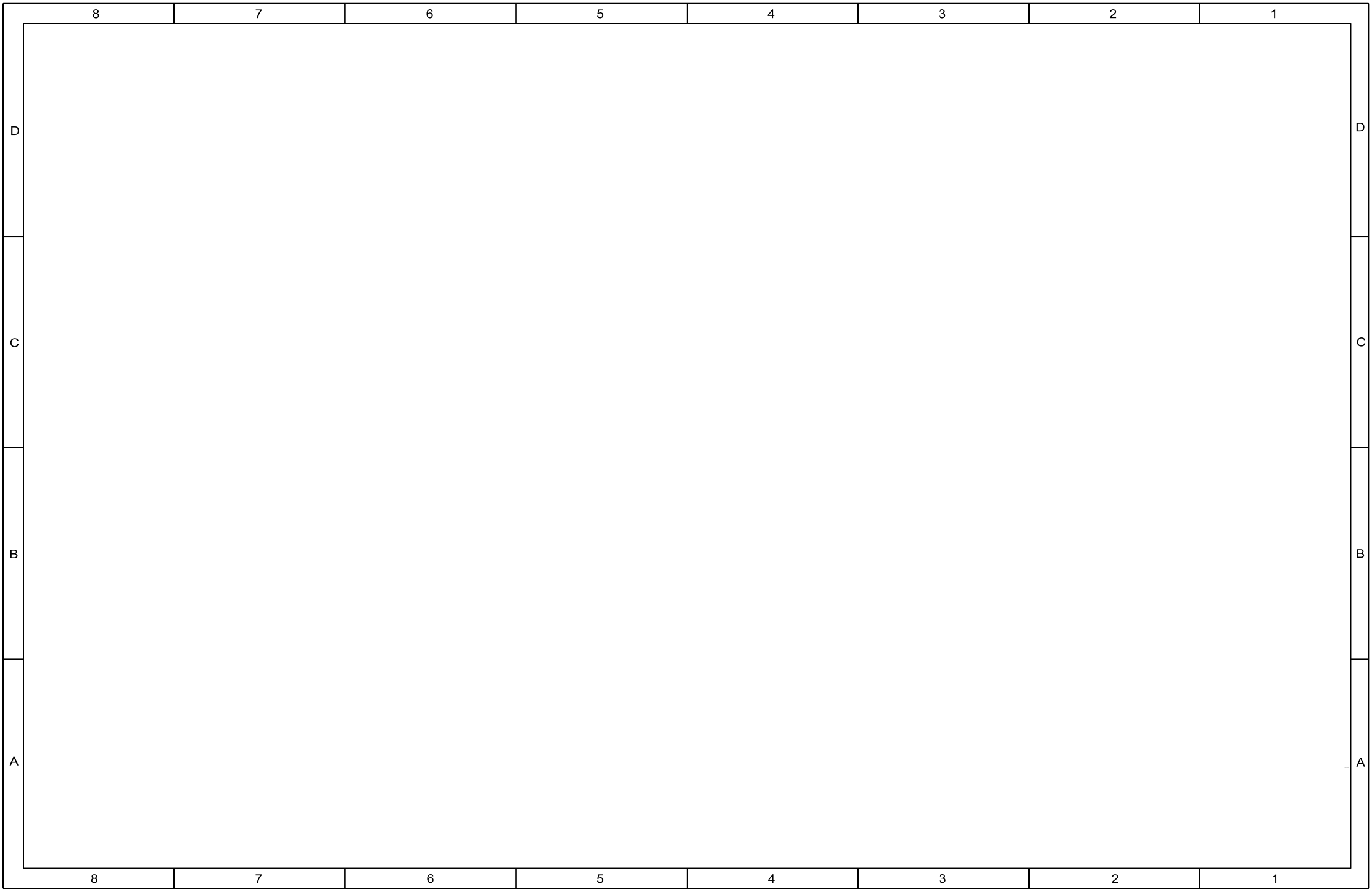

by kass

This page contains items which differ accross all MLB designs

PCIe lanes

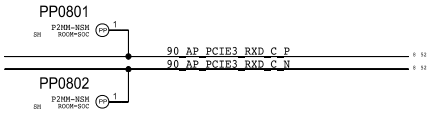

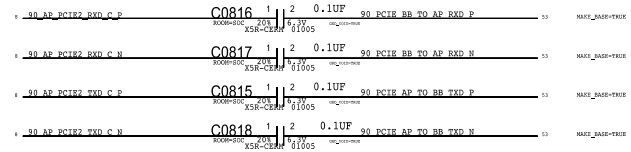

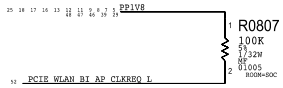

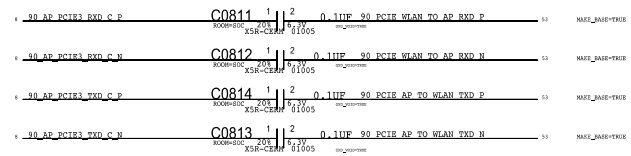

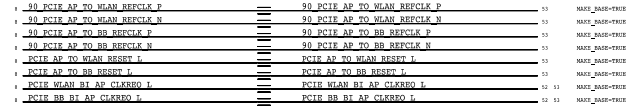

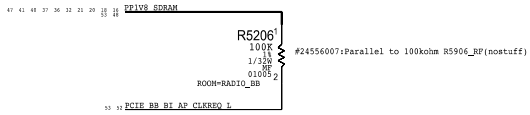

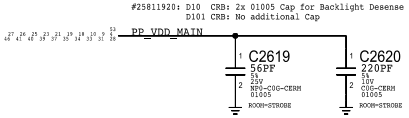

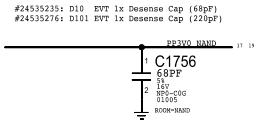

by kass

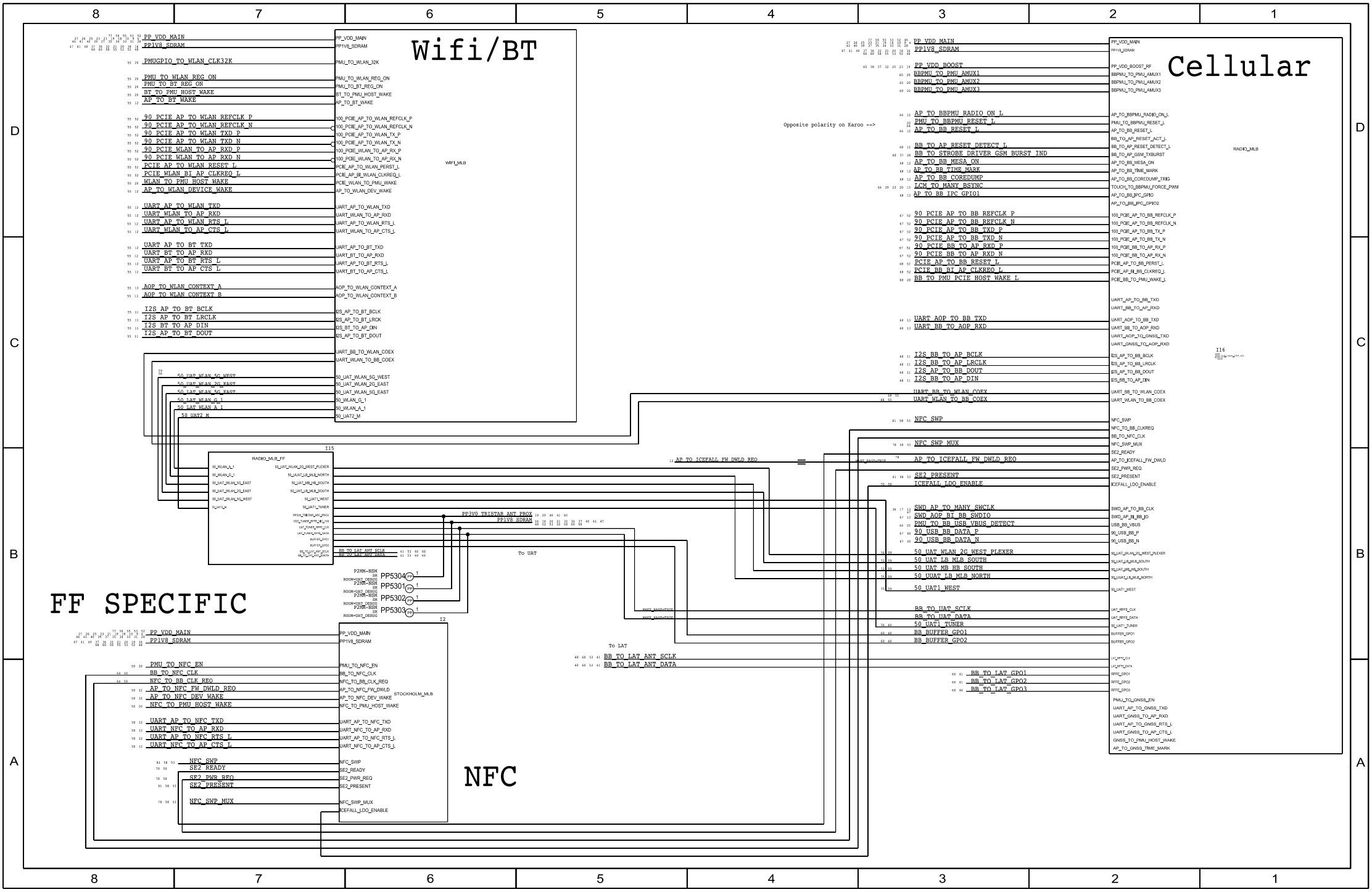
Wifi/BT
WIFI_MLB
Cellular
RADIO_MLB
FF SPECIFIC
NFC
STOCKHOLM_MLB
Opposite polarity on Karoo -->
To UAT
To LAT
PP3V0_TRISTAR_ANT_PROX
PP1V8_SDRAM
PP5304
PP5301
PP5302
PP5303
PP_VDD_MAIN
PP1V8_SDRAM
PMUGPIO_TO_WLAN_CLK32K
PMU_TO_WLAN_REG_ON
PMU_TO_BT_REG_ON
BT_TO_PMU_HOST_WAKE
AP_TO_BT_WAKE
90_PCIE_AP_TO_WLAN_REFCLK_P
90_PCIE_AP_TO_WLAN_REFCLK_N
90_PCIE_AP_TO_WLAN_TXD_P
90_PCIE_AP_TO_WLAN_TXD_N
90_PCIE_WLAN_TO_AP_RXD_P
90_PCIE_WLAN_TO_AP_RXD_N
PCIE_AP_TO_WLAN_RESET_L
PCIE_WLAN_BI_AP_CLKREQ_L
WLAN_TO_PMU_HOST_WAKE
AP_TO_WLAN_DEVICE_WAKE
UART_AP_TO_WLAN_TXD
UART_WLAN_TO_AP_RXD
UART_AP_TO_WLAN_RTS_L
UART_WLAN_TO_AP_CTS_L
UART_AP_TO_BT_TXD
UART_BT_TO_AP_RXD
UART_AP_TO_BT_RTS_L
UART_BT_TO_AP_CTS_L
AOP_TO_WLAN_CONTEXT_A
AOP_TO_WLAN_CONTEXT_B
I2S_AP_TO_BT_BCLK
I2S_AP_TO_BT_LRCLK
I2S_BT_TO_AP_DIN
I2S_AP_TO_BT_DOUT
UART_BB_TO_WLAN_COEX
UART_WLAN_TO_BB_COEX
50_UAT_WLAN_5G_WEST
50_UAT_WLAN_2G_EAST
50_LAT_WLAN_5G_EAST
50_LAT_WLAN_G_1
50_LAT_WLAN_A_1
50_UAT2_M
PP_VDD_BOOST
BBPMU_TO_PMU_AMUX1
BBPMU_TO_PMU_AMUX2
BBPMU_TO_PMU_AMUX3
AP_TO_BBPMU_RADIO_ON_L
PMU_TO_BBPMU_RESET_L
AP_TO_BB_RESET_L
BB_TO_AP_RESET_DETECT_L
BB_TO_STROBE_DRIVER_GSM_BURST_IND
AP_TO_BB_MESA_ON
AP_TO_BB_TIME_MARK
AP_TO_BB_COREDUMP
LCM_TO_MANY_BSYNC
AP_TO_BB_IPC_GPIO1
90_PCIE_AP_TO_BB_REFCLK_P
90_PCIE_AP_TO_BB_REFCLK_N
90_PCIE_AP_TO_BB_TXD_P
90_PCIE_AP_TO_BB_TXD_N
90_PCIE_BB_TO_AP_RXD_P
90_PCIE_BB_TO_AP_RXD_N
PCIE_AP_TO_BB_RESET_L
PCIE_BB_BI_AP_CLKREQ_L
BB_TO_PMU_PCIE_HOST_WAKE_L
UART_AOP_TO_BB_TXD
UART_BB_TO_AOP_RXD
I2S_BB_TO_AP_BCLK
I2S_BB_TO_AP_LRCLK
I2S_AP_TO_BB_DOUT
I2S_BB_TO_AP_DIN
NFC_SWP
NFC_SWP_MUX
AP_TO_ICEFALL_FW_DWLD_REQ
SE2_PRESENT
ICEFALL_LDO_ENABLE
SWD_AP_TO_MANY_SWCLK
SWD_AOP_BI_BB_SWDIO
PMU_TO_BB_USB_VBUS_DETECT
90_USB_BB_DATA_P
90_USB_BB_DATA_N
50_UAT_WLAN_2G_WEST_PLEXER
50_UAT_LB_MLB_SOUTH
50_UAT_MB_HB_SOUTH
50_UAT_LB_MLB_NORTH
50_UAT1_WEST
BB_TO_UAT_SCLK
BB_TO_UAT_DATA
50_UAT1_TUNER
BB_BUFFER_GPO1
BB_BUFFER_GPO2
BB_TO_LAT_GPO1
BB_TO_LAT_GPO2
BB_TO_LAT_GPO3
PMU_TO_GNSS_EN
UART_AP_TO_GNSS_TXD
UART_GNSS_TO_AP_RXD
UART_AP_TO_GNSS_RTS_L
UART_GNSS_TO_AP_CTS_L
GNSS_TO_PMU_HOST_WAKE
AP_TO_GNSS_TIME_MARK
PMU_TO_NFC_EN
BB_TO_NFC_CLK
NFC_TO_BB_CLK_REQ
AP_TO_NFC_FW_DWLD_REQ
AP_TO_NFC_DEV_WAKE
NFC_TO_PMU_HOST_WAKE
UART_AP_TO_NFC_TXD
UART_NFC_TO_AP_RXD
UART_AP_TO_NFC_RTS_L
UART_NFC_TO_AP_CTS_L
SE2_READY
SE2_PWR_REQ
by kass

1. ALL RESISTANCE VALUES ARE IN OHMS, 0.1 WATT +/- 5%.
2. ALL CAPACITANCE VALUES ARE IN MICROFARADS.
3. ALL CRYSTALS & OSCILLATOR VALUES ARE IN HERTZ.

REV	ECN	DESCRIPTION OF REVISION	CK APPD / DATE
8	0006400877	ENGINEERING RELEASED	2016-06-14

D1X WIFI MLB (PERENNIAL)
FEBRUARY 1, 2016

PDF PAGE	CSA PAGE	CONTENTS
2	76	PERENNIAL
3	77	WIFI FRONT-END

BOM OPTIONS:

D10_JP:

PART#	QTY	DESCRIPTION	REFERENCE DESIGNATOR(S)	CRITICAL	BOM OPTION
131S0648	1	CAP,CER,0.3PF,+/-0.05,01005	C7705_RF	CRITICAL	D10_JP
152S00029	1	IND,1.1NH,UH-Q,01005	R7703_RF	CRITICAL	D10_JP
131S0893	1	CAP,CER,0.2PF,+/-0.05,01005	C7706_RF	CRITICAL	D10_JP
117S0161	1	RES,MF,0 OHM,1/32W,01005	R7711_RF	CRITICAL	D10_JP
117S0161	1	RES,MF,0 OHM,1/32W,01005	R7702_RF	CRITICAL	D10_JP
152S1980	1	IND,1.0NH,UH-Q,01005	R7704_RF	CRITICAL	D10_JP
131S0404	1	CAP,3.9PF,+/-1.0PF,01005	R6711_RF	CRITICAL	D10_JP
152S2061	1	IND,7.5NH,UH-Q,01005	C6729_RF	CRITICAL	D10_JP
117S0161	1	RES,MF,0 OHM,1/32W,01005	R7700_RF	CRITICAL	D10_JP
152S2043	1	IND,6.2NH,UH-Q,01005	C7702_RF	CRITICAL	D10_JP
152S1998	1	IND, 0.8NH,UH-Q,01005	L7700_RF	CRITICAL	D10_JP
152S2043	1	IND,6.2NH,UH-Q,01005	L7701_RF	CRITICAL	D10_JP
117S0161	1	RES,MF,0 OHM,1/32W,01005	R7701_RF	CRITICAL	D10_JP

NOSTUFF:C7729_RF,C7711_RF,C7709_RF,C7710_RF, C7707_RF, C7708_RF
C7700_RF, C7703_RF,C7704_RF

D10_ROW:

PART#	QTY	DESCRIPTION	REFERENCE DESIGNATOR(S)	CRITICAL	BOM OPTION
131S0648	1	CAP,CER,0.3PF,+/-0.05,01005	C7705_RF	CRITICAL	D10_ROW
152S00029	1	IND,1.1NH,UH-Q,01005	R7703_RF	CRITICAL	D10_ROW
131S0893	1	CAP,CER,0.2PF,+/-0.05,01005	C7706_RF	CRITICAL	D10_ROW
117S0161	TRUE	RES,MF,0 OHM,1/32W,01005	R7711_RF	CRITICAL	D10_ROW
117S0161	TRUE	RES,MF,0 OHM,1/32W,01005	R7702_RF	CRITICAL	D10_ROW
152S1988	TRUE	IND,2.4NH,UH-Q,01005	R7704_RF	CRITICAL	D10_ROW
117S0161	TRUE	RES,MF,0 OHM,1/32W,01005	R6711_RF	CRITICAL	D10_ROW
152S1853	TRUE	IND,9.1NH,UH-Q,01005	C6729_RF	CRITICAL	D10_ROW
117S0161	TRUE	RES,MF,0 OHM,1/32W,01005	R7700_RF	CRITICAL	D10_ROW
152S2043	1	IND,6.2NH,UH-Q,01005	C7702_RF	CRITICAL	D10_ROW
152S1998	1	IND, 0.8NH,UH-Q,01005	L7700_RF	CRITICAL	D10_ROW
152S2043	TRUE	IND,6.2NH,UH-Q,01005	L7701_RF	CRITICAL	D10_ROW
117S0161	1	RES,MF,0 OHM,1/32W,01005	R7701_RF	CRITICAL	D10_ROW

NOSTUFF:C7729_RF,C7711_RF,C7709_RF,C7710_RF, C7707_RF, C7708_RF
C7700_RF, C7703_RF,C7704_RF

D101_WIFI:

PART#	QTY	DESCRIPTION	REFERENCE DESIGNATOR(S)	CRITICAL	BOM OPTION
131S0648	1	CAP,CER,0.3PF,+/-0.05,01005	C7705_RF	CRITICAL	D101
152S00029	1	IND,1.1NH,UH-Q,01005	R7703_RF	CRITICAL	D101
131S0893	1	CAP,CER,0.2PF,+/-0.05,01005	C7706_RF	CRITICAL	D101
117S0161	1	RES,MF,0 OHM,1/32W,01005	R7711_RF	CRITICAL	D101
117S0161	1	RES,MF,0 OHM,1/32W,01005	R7702_RF	CRITICAL	D101
152S1988	TRUE 1	IND,2.4NH,UH-Q,01005	R7704_RF	CRITICAL	D101
131S0648	TRUE 1	CAP,CER,0.3PF,+/-0.05PF,01005	C7708_RF	CRITICAL	D101
118S0724	TRUE 1	RES,MF, 0 OHM,1/20W, 0201	R6711_RF	CRITICAL	D101
152S2054	TRUE 1	IND,9.1NH,UH-Q,0201	C6729_RF	CRITICAL	D101
117S0161	1	RES,MF,0 OHM,1/32W,01005	R7700_RF	CRITICAL	D101
152S2043	TRUE 1	IND,6.2NH,UH-Q,01005	C7702_RF	CRITICAL	D101
152S1998	1	IND, 0.8NH,UH-Q,01005	L7700_RF	CRITICAL	D101
152S2043	1	IND,6.2NH,UH-Q,01005	L7701_RF	CRITICAL	D101
117S0161	1	RES,MF,0 OHM,1/32W,01005	R7701_RF	CRITICAL	D101

NOSTUFF: C7729_RF,C7711_RF,C7709_RF,C7710_RF, C7707_RF
C7700_RF, C7703_RF,C7704_RF

D11_JP:

PART#	QTY	DESCRIPTION	REFERENCE DESIGNATOR(S)	CRITICAL	BOM OPTION
152S00273	TRUE 1	IND,0.6NH,UH-Q,01005	R7703_RF	CRITICAL	D11_JP
152S1976	TRUE 1	IND,0.7NH,UH-Q,01005	R7711_RF	CRITICAL	D11_JP
131S0400	TRUE 1	CAP,CER,3.5PF+/-0.1,01005	R7702_RF	CRITICAL	D11_JP
152S1986	TRUE 1	IND,FILM,2.2NH,UH-Q,01005	R7704_RF	CRITICAL	D11_JP
131S0648	TRUE 1	CAP,CER,0.3PF,+/-0.05PF,01005	C7708_RF	CRITICAL	D11_JP
131S0593	TRUE 1	CAP,3.9PF,+/-1.0PF,0201,HI-Q	R6711_RF	CRITICAL	D11_JP
152S2055	TRUE 1	IND,7.5NH,UH-Q,0201	C6729_RF	CRITICAL	D11_JP
117S0161	TRUE 1	RES,MF,0 OHM,1/32W,01005	R7700_RF	CRITICAL	D11_JP
117S0161	TRUE 1	RES,MF,0 OHM,1/32W,01005	L7700_RF	CRITICAL	D11_JP
152S1853	TRUE 1	IND,9.1NH,UH-Q,01005	L7701_RF	CRITICAL	D11_JP
117S0161	TRUE 1	RES,MF,0 OHM,1/32W,01005	R7701_RF	CRITICAL	D11_JP
131S0893	TRUE 1	CAP,CER,0.2PF,+/-0.05PF,01005	C7705_RF	CRITICAL	D11_JP
131S0893	1	CAP,CER,0.2PF,+/-0.05PF,01005	C7729_RF	CRITICAL	D11_JP

NOSTUFF:C7706_RF, C7711_RF,C7709_RF,C7710_RF, C7707_RF
C7700_RF,C7702_RF, C7703_RF,C7704_RF

D11_ROW:

PART#	QTY	DESCRIPTION	REFERENCE DESIGNATOR(S)	CRITICAL	BOM OPTION
152S00273	1	IND,0.6NH,UH-Q,01005	R7703_RF	CRITICAL	D11_ROW
152S1976	1	IND,0.7NH,UH-Q,01005	R7711_RF	CRITICAL	D11_ROW
131S0400	1	CAP,CER,3.5PF+/-0.1,01005	R7702_RF	CRITICAL	D11_ROW
152S1986	TRUE 1	IND,FILM,2.2NH,UH-Q,01005	R7704_RF	CRITICAL	D11_ROW
118S0724	TRUE 1	RES,MF,0 OHM,1/20W,0201	R6711_RF	CRITICAL	D11_ROW
152S2054	TRUE 1	IND,9.1NH,UH-Q,0201	C6729_RF	CRITICAL	D11_ROW
117S0161	1	RES,MF,0 OHM,1/32W,01005	R7700_RF	CRITICAL	D11_ROW
117S0161	1	RES,MF,0 OHM,1/32W,01005	L7700_RF	CRITICAL	D11_ROW
152S1853	1	IND,9.1NH,UH-Q,01005	L7701_RF	CRITICAL	D11_ROW
117S0161	1	RES,MF,0 OHM,1/32W,01005	R7701_RF	CRITICAL	D11_ROW
131S0893	1	CAP,CER,0.2PF,+/-0.05PF,01005	C7705_RF	CRITICAL	D11_ROW
131S0893	1	CAP,CER,0.2PF,+/-0.05PF,01005	C7729_RF	CRITICAL	D11_ROW

NOSTUFF:C7706_RF,C7711_RF,C7709_RF,C7710_RF, C7707_RF, C7708_RF
C7700_RF,C7702_RF, C7703_RF,C7704_RF

D111_WIFI:

PART#	QTY	DESCRIPTION	REFERENCE DESIGNATOR(S)	CRITICAL	BOM OPTION
152S00273	1	IND,0.6NH,UH-Q,01005	R7703_RF	CRITICAL	D111
152S1976	1	IND,0.7NH,UH-Q,01005	R7711_RF	CRITICAL	D111
131S0400	1	CAP,CER,3.5PF+/-0.1,01005	R7702_RF	CRITICAL	D111
152S1986	TRUE 1	IND,FILM,2.2NH,UH-Q,01005	R7704_RF	CRITICAL	D111
118S0724	TRUE 1	RES,MF, 0 OHM,1/20W, 0201	R6711_RF	CRITICAL	D111
152S2054	TRUE 1	IND,9.1NH,UH-Q,0201	C6729_RF	CRITICAL	D111
117S0161	1	RES,MF,0 OHM,1/32W,01005	R7700_RF	CRITICAL	D111
117S0161	1	RES,MF,0 OHM,1/32W,01005	L7700_RF	CRITICAL	D111
152S1853	1	IND,9.1NH,UH-Q,01005	L7701_RF	CRITICAL	D111
117S0161	1	RES,MF,0 OHM,1/32W,01005	R7701_RF	CRITICAL	D111
131S0893	1	CAP,CER,0.2PF,+/-0.05PF,01005	C7705_RF	CRITICAL	D111
131S0893	1	CAP,CER,0.2PF,+/-0.05PF,01005	C7729_RF	CRITICAL	D111

NOSTUFF:C7706_RF,C7711_RF,C7709_RF,C7710_RF, C7707_RF, C7708_RF
C7700_RF,C7702_RF, C7703_RF,C7704_RF

POWER
- 55 53 IN PP_VDD_MAIN
- 55 53 IN PP1V8_SDRAM

CLOCKS
- 55 53 IN PMUGPIO_TO_WLAN_CLK32K

CONTROL
- 55 53 IN PMU_TO_WLAN_REG_ON
- 55 53 IN PMU_TO_BT_REG_ON
- 55 53 OUT BT_TO_PMU_HOST_WAKE
- 55 53 IN AP_TO_BT_WAKE

WLAN PCIE
- 55 53 IN 90_PCIE_AP_TO_WLAN_REFCLK_P
- 55 53 IN 90_PCIE_AP_TO_WLAN_REFCLK_N
- 55 53 IN 90_PCIE_AP_TO_WLAN_TXD_P
- 55 53 IN 90_PCIE_AP_TO_WLAN_TXD_N
- 55 53 OUT 90_PCIE_WLAN_TO_AP_RXD_P
- 55 53 OUT 90_PCIE_WLAN_TO_AP_RXD_N
- 55 53 IN PCIE_AP_TO_WLAN_RESET_L
- 2 IN PCIE_WLAN_BT_AP_CLKREQ_L
- 55 53 OUT WLAN_TO_PMU_HOST_WAKE
- 55 53 IN AP_TO_WLAN_DEVICE_WAKE

WLAN UART
- 55 53 OUT UART_WLAN_TO_AP_RXD
- 55 53 IN UART_AP_TO_WLAN_TXD
- 55 53 OUT UART_WLAN_TO_AP_CTS_L
- 55 53 IN UART_AP_TO_WLAN_RTS_L

BLUETOOTH UART
- 55 53 IN UART_AP_TO_BT_TXD
- 55 53 OUT UART_BT_TO_AP_RXD
- 55 53 IN UART_AP_TO_BT_RTS_L
- 55 53 OUT UART_BT_TO_AP_CTS_L

AOP
- 55 53 IN AOP_TO_WLAN_CONTEXT_A
- 55 53 IN AOP_TO_WLAN_CONTEXT_B

AUDIO
- 55 53 IN I2S_AP_TO_BT_BCLK
- 55 53 IN I2S_AP_TO_BT_LRCLK
- 55 53 OUT I2S_BT_TO_AP_DIN
- 55 53 IN I2S_AP_TO_BT_DOUT

COEX
- 55 53 IN UART_BB_TO_WLAN_COEX
- 55 53 OUT UART_WLAN_TO_BB_COEX

ANTENNA
- 2 IN 50_UAT_WLAN_5G_WEST
- 2 IN 50_UAT_WLAN_2G_EAST
- 2 IN 50_LAT_WLAN_5G_EAST
- 2 IN 50_LAT_WLAN_G_1
- 2 IN 50_LAT_WLAN_A_1
- 2 IN 50_UAT2_M

CONFIDENTIAL AND PROPRIETARY APPLE SYSTEM DESIGN. FOR REFERENCE PURPOSE ONLY - NOT A CHANGE REQUEST

by kass

WIFI/BT

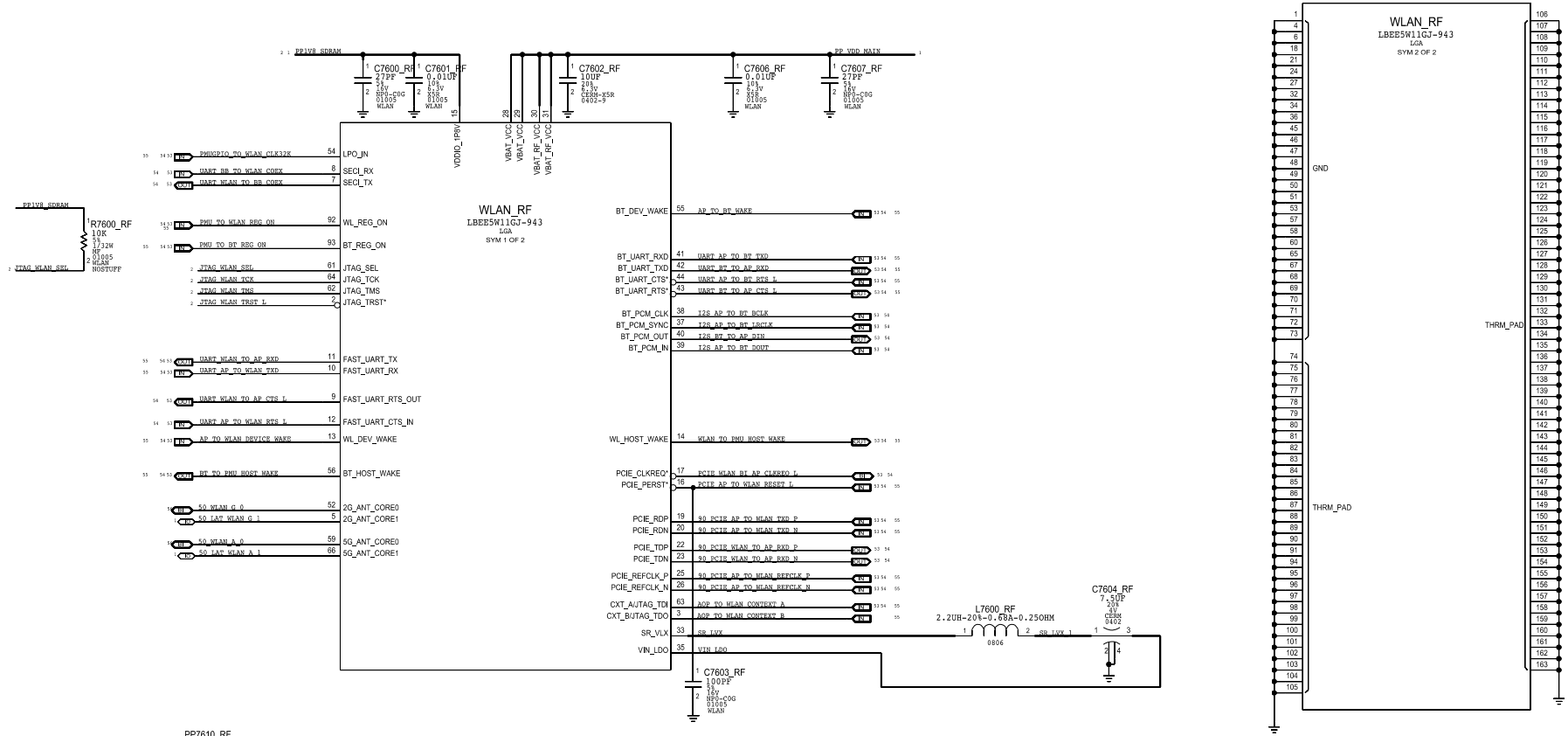

PART NUMBER	ALTERNATE FOR PART NUMBER	BOM OPTION	REF DES	COMMENTS:
339S00201	339S00199	ALTERNATE	WLAN_RF	ALT WIFI/BT MODULE

by kass

WIFI UPPER ANTENNA FEEDS

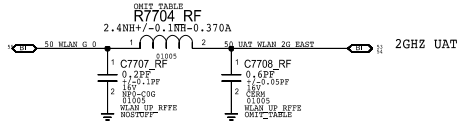

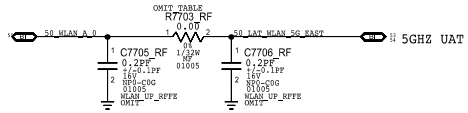

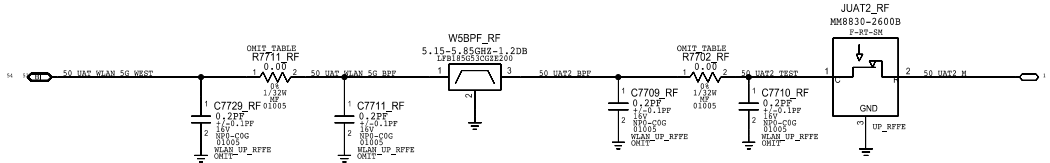

by kass

1. ALL RESISTANCE VALUES ARE IN OHMS, 0.1 WATT +/- 5%.
2. ALL CAPACITANCE VALUES ARE IN MICROFARADS.
3. ALL CRYSTALS & OSCILLATOR VALUES ARE IN HERTZ.

REV	ECN	DESCRIPTION OF REVISION	CK APPD
8	0006400877	ENGINEERING RELEASED	

STOCKHOLM MLB
JUNE 9, 2016

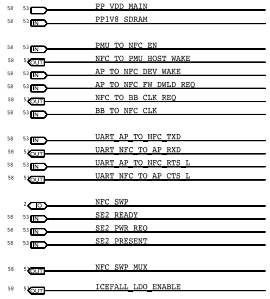

ALTERNATES

PART NUMBER	ALTERNATE FOR PART NUMBER	REFERENCE DESIGNATOR(S)	DESCRIPTION	BOM OPTION
132S0436	132S0400	C7504_RF	0.22UF 20% 6.3V 01005	?

BOM OPTIONS

PART#	QTY	DESCRIPTION	REFERENCE DESIGNATOR(S)	BOM OPTION
131S0883	1	220PF, 0201 2% 50V	C7514_RF	D101
131S00055	1	22PF, 0201 2% 50V	C7512_RF	D101
131S00117	1	120PF, 0201 2% 50V	C7518_RF	D101
131S00026	1	820PF, 0201 2% 50V	C7516_RF	D101
131S0883	1	220PF, 0201 2% 50V	C7514_RF	D10_JP
131S00055	1	22PF, 0201 2% 50V	C7512_RF	D10_JP
131S00019	1	150PF, 0201 2% 50V	C7518_RF	D10_JP
131S0825	1	560PF, 0201 2% 50V	C7516_RF	D10_JP
131S0883	1	220PF, 0201 2% 50V	C7514_RF	D10_ROM
131S00055	1	22PF, 0201 2% 50V	C7512_RF	D10_ROM
131S00117	1	120PF, 0201 2% 50V	C7518_RF	D10_ROM
131S00026	1	820PF, 0201 2% 50V	C7516_RF	D10_ROW

PART#	QTY	DESCRIPTION	REFERENCE DESIGNATOR(S)	BOM OPTION
131S00081	1	270PF, 0201 2% 25V	C7514_RF	D111
131S00118	1	180PF, 0201 2% 50V	C7518_RF	D111
131S00033	1	680PF, 0201 2% 50V	C7516_RF	D111
131S00081	1	270PF, 0201 2% 25V	C7514_RF	D11_JP
131S0731	1	100PF, 0201 2% 50V	C7518_RF	D11_JP
131S00033	1	680PF, 0201 2% 50V	C7516_RF	D11_JP
131S00081	1	270PF, 0201 2% 25V	C7514_RF	D11_ROM
131S00118	1	180PF, 0201 2% 50V	C7518_RF	D11_ROM
131S00033	1	680PF, 0201 2% 50V	C7516_RF	D11_ROM

by kass

STOCKHOLM

5V BOOSTER

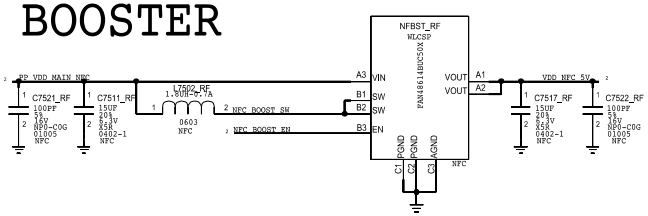

NFC CONTROLLER

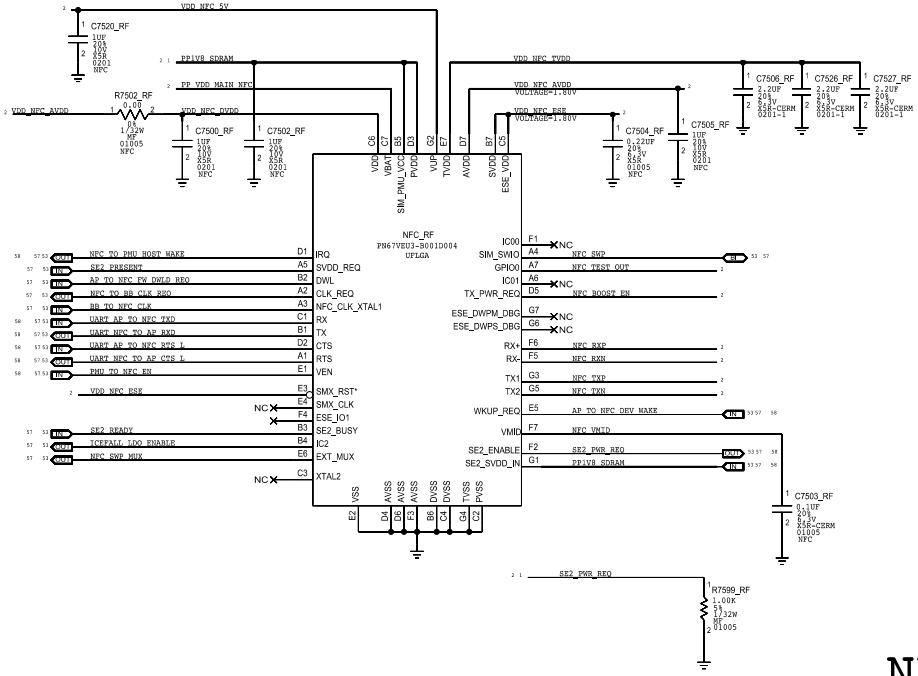

NFC FRONT END

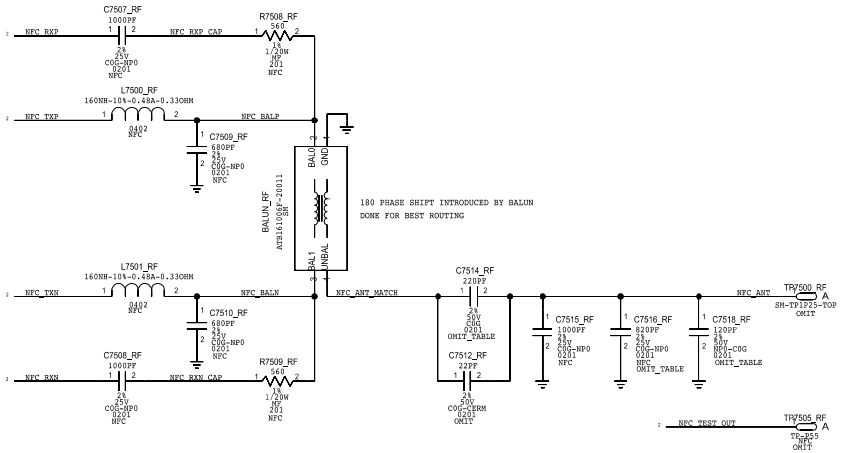

NFC LOAD SWITCH

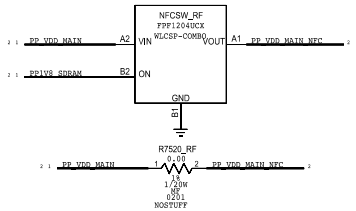

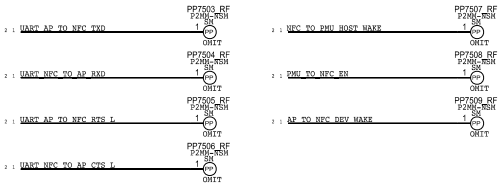

by kass

1. ALL RESISTANCE VALUES ARE IN OHMS, 0.1 WATT +/- 5%.
2. ALL CAPACITANCE VALUES ARE IN MICROFARADS.
3. ALL CRYSTALS & OSCILLATOR VALUES ARE IN HERTZ.

REV	ECN	DESCRIPTION OF REVISION	DATE
8	0006400877	ENGINEERING RELEASED	2016-06-14

D10 RADIO MLB_FF
FEB 19, 2016

D10 NORTH-SOUTH METROCIRC
339S00086

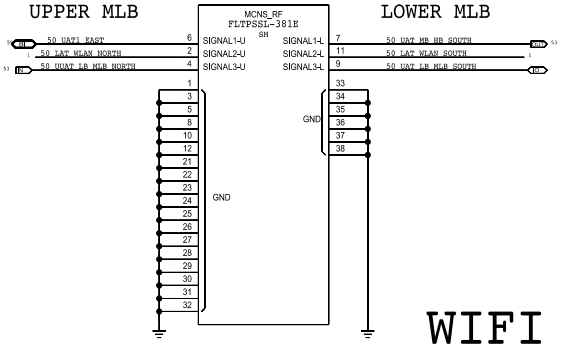

D10 EAST-WEST METROCIRC
339S00110

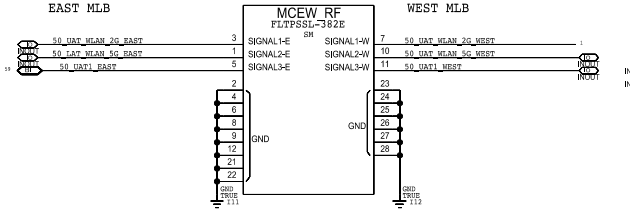

WIFI LOWER ANTENNA FEED

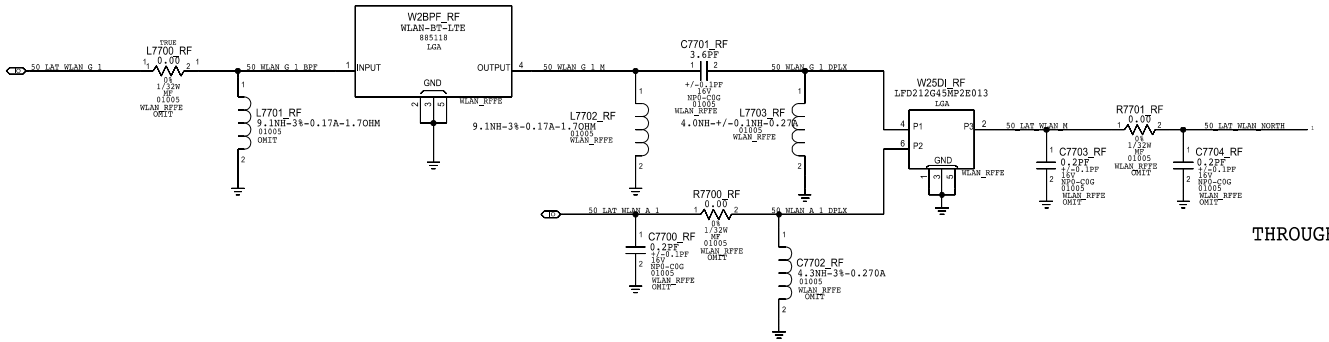

COAX

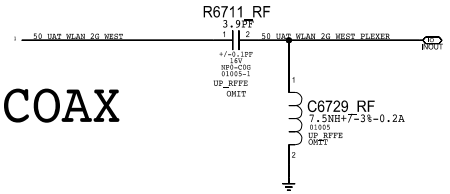

THROUGH METROCIRC

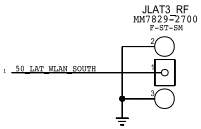

ADD REV ID FOR D10/D11 HERE

by kass

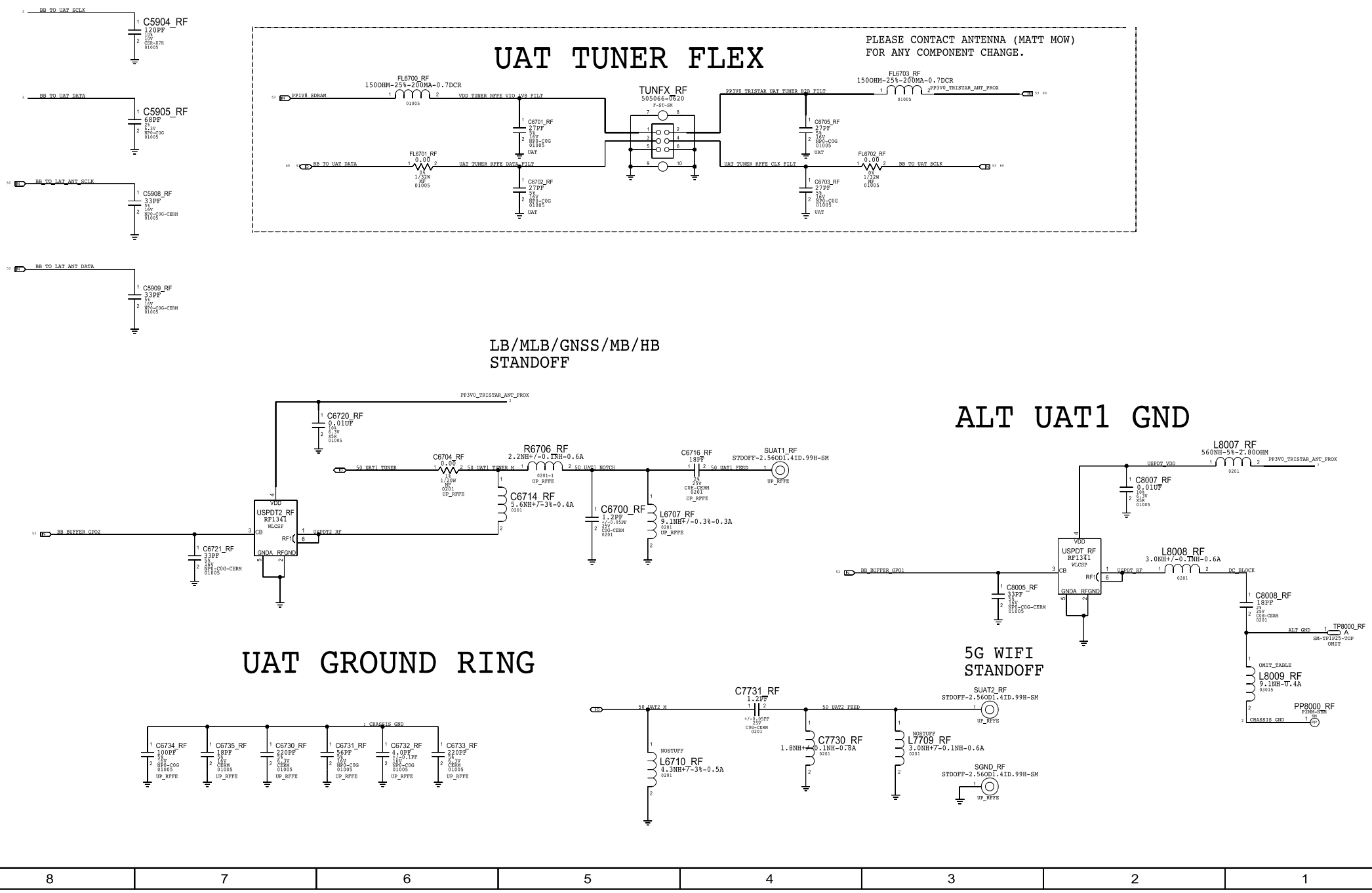
UAT TUNER FLEX
PLEASE CONTACT ANTENNA (MATT MOW)
FOR ANY COMPONENT CHANGE.
C5904_RF
120PF
C5905_RF
68PF
C5908_RF
33PF
C5909_RF
33PF
FL6700_RF
150OHM-25%-200MA-0.7DCR
FL6701_RF
0.0Ω
FL6702_RF
0.0Ω
FL6703_RF
150OHM-25%-200MA-0.7DCR
TUNFX_RF
505066-0620
C6701_RF
27PF
C6702_RF
27PF
C6703_RF
27PF
C6705_RF
27PF
LB/MLB/GNSS/MB/HB
STANDOFF
C6720_RF
0.01UF
C6704_RF
0.0Ω
R6706_RF
2.2NH+/-0.1NH-0.6A
C6716_RF
18PF
SUAT1_RF
STDOFF-2.56ODI.41D.99H-SM
C6714_RF
5.6NH+/-3%-0.4A
C6700_RF
1.2PF
L6707_RF
9.1NH+/-0.3%-0.3A
USPDT2_RF
RF1341
C6721_RF
33PF
ALT UAT1 GND
L8007_RF
560NH-5%-2.80OHM
C8007_RF
0.01UF
USPDT_RF
RF1341
L8008_RF
3.0NH+/-0.1NH-0.6A
C8005_RF
33PF
C8008_RF
18PF
TP8000_RF
L8009_RF
9.1NH-U.4A
PP8000_RF
UAT GROUND RING
C6734_RF
100PF
C6735_RF
18PF
C6730_RF
220PF
C6731_RF
56PF
C6732_RF
4.0PF
C6733_RF
220PF
5G WIFI
STANDOFF
C7731_RF
1.2PF
SUAT2_RF
STDOFF-2.56ODI.41D.99H-SM
L6710_RF
4.3NH+/-3%-0.5A
C7730_RF
1.8NH+/-0.1NH-0.8A
L7709_RF
3.0NH+/-0.1NH-0.6A
SGND_RF
STDOFF-2.56ODI.41D.99H-SM

by kass

BOM LIST

PART#	QTY.	DESCRIPTION	REFERENCE DESIGNATOR(S)	CRITICAL	BOM OPTION
15281860	1	LONGTH PATH INDUCTOR	L8009_RF	CRITICAL	LHBRF
15280570	1	3.0 NH,03015	L8009_RF	CRITICAL	HOLMBRF

by kass

81 ICEFALL, SIM, DEBUG_CONN

1. ALL RESISTANCE VALUES ARE IN OHMS, 0.1 WATT +/- 5%.
2. ALL CAPACITANCE VALUES ARE IN MICROFARADS.
3. ALL CRYSTALS & OSCILLATOR VALUES ARE IN HERTZ.

REV	ECN	DESCRIPTION OF REVISION	CK APPD / DATE
8	0006400877	ENGINEERING RELEASED	2016-06-14

MAV16 RADIO_MLB

LAST_MODIFICATION=Wed Jun 8 12:54:09 2016

PAGE	CSA_PAGE	CONTENTS	SYNC_MASTER	SYNC_DATE
62	<CSA_PAGE1>	page1	<SYNC_MASTER1>	<SYNC_DATE1>
63	<CSA_PAGE2>	BOM_OMIT_TABLE	<SYNC_MASTER2>	<SYNC_DATE2>
64	<CSA_PAGE3>	PMU: CONTROL AND CLOCKS	<SYNC_MASTER3>	<SYNC_DATE3>
65	<CSA_PAGE4>	PMU: SWITCHERS AND LDOS	<SYNC_MASTER4>	<SYNC_DATE4>
66	<CSA_PAGE5>	BASEBAND: POWER2	<SYNC_MASTER5>	<SYNC_DATE5>
67	<CSA_PAGE6>	BASEBAND: CONTROL	<SYNC_MASTER6>	<SYNC_DATE6>
68	<CSA_PAGE7>	BASEBAND GPIOS	<SYNC_MASTER7>	<SYNC_DATE7>
69	<CSA_PAGE8>	TRANSCEIVER0/1: POWER	<SYNC_MASTER8>	<SYNC_DATE8>
70	<CSA_PAGE9>	TRANSCEIVER0/1: TX PORTS	<SYNC_MASTER9>	<SYNC_DATE9>
71	<CSA_PAGE10>	TRANSCEIVER0/1: PRX PORTS	<SYNC_MASTER10>	<SYNC_DATE10>
72	<CSA_PAGE11>	RECEIVE MATCHING	<SYNC_MASTER11>	<SYNC_DATE11>
73	<CSA_PAGE12>	LOWER ANTENNA & COUPLERS	<SYNC_MASTER12>	<SYNC_DATE12>
74	<CSA_PAGE13>	DIVERSITY RECEIVE ASM'S	<SYNC_MASTER13>	<SYNC_DATE13>
75	<CSA_PAGE14>	DIVERSITY RECEIVE LNA'S	<SYNC_MASTER14>	<SYNC_DATE14>
76	<CSA_PAGE15>	UPPER ANTENNA FEEDS	<SYNC_MASTER15>	<SYNC_DATE15>
77	<CSA_PAGE16>	PMU: ET MODULATOR	<SYNC_MASTER16>	<SYNC_DATE16>
78	<CSA_PAGE17>	TEST POINTS & BOOT CONFIG	<SYNC_MASTER17>	<SYNC_DATE17>
79	<CSA_PAGE18>	TDD TRANSMIT	<SYNC_MASTER18>	<SYNC_DATE18>
80	<CSA_PAGE19>	FDD TRANSMIT	<SYNC_MASTER19>	<SYNC_DATE19>
	<CSA_PAGE20>		<SYNC_MASTER20>	<SYNC_DATE20>
	<CSA_PAGE21>		<SYNC_MASTER21>	<SYNC_DATE21>
	<CSA_PAGE22>		<SYNC_MASTER22>	<SYNC_DATE22>
	<CSA_PAGE23>		<SYNC_MASTER23>	<SYNC_DATE23>
	<CSA_PAGE24>		<SYNC_MASTER24>	<SYNC_DATE24>
	<CSA_PAGE25>		<SYNC_MASTER25>	<SYNC_DATE25>
	<CSA_PAGE26>		<SYNC_MASTER26>	<SYNC_DATE26>
	<CSA_PAGE27>		<SYNC_MASTER27>	<SYNC_DATE27>
	<CSA_PAGE28>		<SYNC_MASTER28>	<SYNC_DATE28>
	<CSA_PAGE29>		<SYNC_MASTER29>	<SYNC_DATE29>
	<CSA_PAGE30>		<SYNC_MASTER30>	<SYNC_DATE30>

SCH: 951-00964
BOM: 939-00826

ALTERNATES

PART NUMBER	ALTERNATE FOR PART NUMBER	BOM OPTION	REF DES	COMMENTS:
19780565	19780593	ALTERNATE	Y5501_RF	19P2 MHZ XTAL
19780598	19780593	ALTERNATE	Y5501_RF	19P2 MHZ XTAL
138800101	138800095	ALTERNATE	ALL	TRANSITION CAP
335800013	335S0894	ALTERNATE	EPROM_RF	IC EEPROM
353800253	353800321	ALTERNATE	SWPMX_RF	IC SWITCH SPDT
155800235	155800234	ALTERNATE	UPFDI_RF	HOLNSRF

ALL:C5616_RF-C5618_RF,C5632_RF-C5634_RF

AP CONNECTIONS

POWER

PP_VDD_MAIN
PP_VDD_BOOST
PPIV8_SDRAM
PP_VDD_BOOST
MAKE_BASE=TRUE

AMUX

BBPMU_TO_PMU_AMUX1
BBPMU_TO_PMU_AMUX2
BBPMU_TO_PMU_AMUX3

DEBUG

SWD_AP_TO_MANY_SWCLK
SWD_AOP_BI_BB_SWDIO
PMU_TO_BB_USB_VBUS_DETECT
90_USB_BB_DATA_P
90_USB_BB_DATA_N

BB CONTROL

AP_TO_BBPMU_RADIO_ON_L
PMU_TO_BBPMU_RESET_L
AP_TO_BB_RESET_L
BB_TO_AP_RESET_DETECT_L
BB_TO_STROBE_DRIVER_GSM_BURST_IND
AP_TO_BB_MESA_ON
AP_TO_BB_TIME_MARK
AP_TO_BB_COREDUMP
LCM_TO_MANY_BSYNC
AP_TO_BB_IPC_GPIO1

ANTENNA

50_UAT_WLAN_2G_WEST_PLEXER
50_UAT1_WEST
50_UAT_LB_MLB_SOUTH
50_UAT_MB_HB_SOUTH
50_UAT_LB_MLB_NORTH

PCIE

90_PCIE_AP_TO_BB_REFCLK_P
90_PCIE_AP_TO_BB_REFCLK_N
90_PCIE_AP_TO_BB_TXD_P
90_PCIE_AP_TO_BB_TXD_N
90_PCIE_BB_TO_AP_RXD_P
90_PCIE_BB_TO_AP_RXD_N
PCIE_AP_TO_BB_RESET_L
PCIE_BB_BI_AP_CLKREQ_L
BB_TO_PMU_PCIE_HOST_WAKE_L

AOP

UART_AOP_TO_BB_TXD
UART_BB_TO_AOP_RXD

AUDIO

I2S_BB_TO_AP_BCLK
I2S_BB_TO_AP_LRCLK
I2S_AP_TO_BB_DOUT
I2S_BB_TO_AP_DIN

WLAN

UART_BB_TO_WLAN_COEX
UART_WLAN_TO_BB_COEX

NFC

NFC_SWP
NFC_SWP_MUX
SE2_READY
AP_TO_ICEFALL_FW_DWLD_REQ
SE2_PWR_REQ
NFC_TO_BB_CLK_REQ
BB_TO_NFC_CLK
SE2_PRESENT
ICEFALL_LDO_ENABLE

TUNER

MAKE_BASE=TRUE
BB_TO_UAT_SCLK
BB_TO_UAT_DATA
BB_TO_UAT_SCLK
BB_TO_UAT_DATA
MAKE_BASE=TRUE
50_UAT1_TUNER
BB_BUFFER_GPO1
BB_BUFFER_GPO2

DOCK

MAKE_BASE=TRUE
BB_TO_LAT_ANT_SCLK
BB_TO_LAT_ANT_DATA
BB_TO_LAT_ANT_SCLK
BB_TO_LAT_ANT_DATA
MAKE_BASE=TRUE
BB_TO_LAT_GPO1
BB_TO_LAT_GPO2
BB_TO_LAT_GPO3

by kass

BOM OPTIONS:

LMBRF:

PART#	QTY	DESCRIPTION	REFERENCE DESIGNATOR(S)	CRITICAL	BOM OPTION
353G00723	1	MLB PAD	MLBPA_RF	CRITICAL	LMBRF
11780002	1	MLB PAD LAT OUTPUT MATCH	R7105_RF	CRITICAL	LMBRF
152S2042	1	MLB PAD UAT OUTPUT MATCH	R7106_RF	CRITICAL	LMBRF
353G00627	1	MLB LNA	MLBLN_RF	CRITICAL	LMBRF
11780002	1	MLB LNA OUTPUT MATCH	R6710_RF	CRITICAL	LMBRF
155G00139	1	PENTAPLEXER	PPLXR_RF	CRITICAL	LMBRF
11880643	1	RES,MF,4.99K OHM,01005	R7506_RF	CRITICAL	LMBRF
155G00193	1	FLTR,DIPLEXER,LB-MB-HB,DPX,SHIELD,0805	UATDI_RF	CRITICAL	LMBRF
155G00158	1	FLTR,DIPLEXER,LB-MB/HB,MIRROR,0805	UPPDI_RF	CRITICAL	LMBRF
337G00284	1	IC,SRC1G0 ELEMENT,BCM2211,MLBGA25	SE2_RF	CRITICAL	LMBRF
13880739	1	CAP,1UF,0201	C7201_RF	CRITICAL	LMBRF
13880739	1	CAP,1UF,0201	C7520_RF	CRITICAL	LMBRF
13280216	1	CAP,0.1UF,01005	C7501_RF	CRITICAL	LMBRF
13880739	1	CAP,1UF,0201	C7523_RF	CRITICAL	LMBRF
13880739	1	CAP,1UF,0201	C7524_RF	CRITICAL	LMBRF
138S00032	1	CAP,2.2UF,0201	C7529_RF	CRITICAL	LMBRF
138S00032	1	CAP,2.2UF,0201	C7530_RF	CRITICAL	LMBRF
13180217	1	CAP,180PF,01005	C7531_RF	CRITICAL	LMBRF
11806627	1	RES,180OHM,01005	R7512_RF	CRITICAL	LMBRF
353S00026	1	LGO,BGA,2X2	SE2LDO_RF	CRITICAL	LMBRF
13180630	1	CAP,CER,NPO/COG,27PF,24,16V,01005	C6345_RF	CRITICAL	LMBRF
13180341	1	CAP,CER,COG,3.0PF,+/-0.05,25V,0201,MI-Q	C6348_RF	CRITICAL	LMBRF
152S2006	1	IND,FILM,6.2NH,3%,400MA,UH-Q,0201	L6322_RF	CRITICAL	LMBRF
13180630	1	CAP,CER,NPO/COG,27PF,24,16V,01005	C6315_RF	CRITICAL	LMBRF
152S2006	1	IND,FILM,6.2NH,3%,400MA,UH-Q,0201	L6305_RF	CRITICAL	LMBRF
13180341	1	CAP,CER,COG,3.0PF,+/-0.05PF,25V,0201,MI-Q	C6306_RF	CRITICAL	LMBRF
13180630	1	CAP,CER,NPO/COG,27PF,24,16V,01005	C6106_RF	CRITICAL	LMBRF
152S2051	1	IND,1.3NH,1.1A,0201	R6404_RF	CRITICAL	LMBRF
152S2000	1	IND,2.0NH,600MA,0201	R7104_RF	CRITICAL	LMBRF
131S00001	1	CAP,CER,0.1PF,25V,0201	C7119_RF	CRITICAL	LMBRF
11880724	1	RES,MF,00HM,1/20W,0201	R6703_RF	CRITICAL	LMBRF
11880724	1	RES,MF,00HM,1/20W,0201	R6708_RF	CRITICAL	LMBRF
13180363	1	CAP,CER,C0G,HQ,8.6PF,+/-0.05PF,25V,0201	C7123_RF	CRITICAL	LMBRF
152S2002	1	IND,2.7NH,+/-0.1NH,600MA,0201,UH-Q	R6605_RF	CRITICAL	LMBRF
13180337	1	CAP,1.5PF,+/-0.05PF,25V,0201,HQ	C6610_RF	CRITICAL	LMBRF
11880724	1	RES,MF,00HM,1/20W,0201	R6606_RF	CRITICAL	LMBRF
13180275	1	CAP,CER,C0G,8.2PF,+/-0.1PF,25V,0201,MQ	C6416_RF	CRITICAL	LMBRF
11880608	1	RES,MF,1K OHM,1%,1/32W,01005	R5911_RF	CRITICAL	LMBRF
152S1356	1	IND,10NH,3%,250MA,MI-Q,0201	C6613_RF	CRITICAL	LMBRF

NOLMBRF:

PART#	QTY	DESCRIPTION	REFERENCE DESIGNATOR(S)	CRITICAL	BOM OPTION
13180444	1	DCS/PCS RX FILTER MATCH	R6301_RF	CRITICAL	NOLMBRF
152S2020	1	DCS/PCS RX FILTER MATCH	L6320_RF	CRITICAL	NOLMBRF
155S00149	1	DCS/PCS RX FILTER	GSMRX_RF	CRITICAL	NOLMBRF
152S2005	1	DCS/PCS RX MATCH (DCS)	L6318_RF	CRITICAL	NOLMBRF
13180319	1	DCS/PCS RX MATCH (DCS)	C6332_RF	CRITICAL	NOLMBRF
13180630	1	DCS/PCS RX MATCH (DCS)	C6340_RF	CRITICAL	NOLMBRF
152S2005	1	DCS/PCS RX MATCH (DCS)	L6319_RF	CRITICAL	NOLMBRF
13180385	1	DCS/PCS RX MATCH (DCS)	C6333_RF	CRITICAL	NOLMBRF
13180630	1	DCS/PCS RX MATCH (DCS)	C6341_RF	CRITICAL	NOLMBRF
155S00163	1	QUADPLEXER	PPLXR_RF	CRITICAL	NOLMBRF
155S00199	1	FLTR,DPX,PASS TRNS,LB-MB-HB,SHLD,0805	UATDI_RF	CRITICAL	NOLMBRF
155S00234	1	FLTR,DPX,PASS TRNS,LB-MB-HB,UNSHLD,0805	UPPDI_RF	CRITICAL	NOLMBRF
11880724	1	RES,MF,00HM,1/20W,0201	R6404_RF	CRITICAL	NOLMBRF
152S2044	1	IND,2.2NH,+/-0.1NH,600MA,0201	R7104_RF	CRITICAL	NOLMBRF
152S00157	1	1.2NH,+/-0.05NH,1.1A,UH-Q,0201	R6703_RF	CRITICAL	NOLMBRF
13180549	1	180PF,0201,25V	R6708_RF	CRITICAL	NOLMBRF
13180445	1	CAP,CER,12PF,5%,25V,0201,HI-Q	R6606_RF	CRITICAL	NOLMBRF

D10 SPECIFIC:

PART#	QTY	DESCRIPTION	REFERENCE DESIGNATOR(S)	CRITICAL	BOM OPTION
13180278	1	CAP,CER,COG,10PF,+/-0.10PF,25V,0201,HI-Q	C7120_RF	CRITICAL	D10

D11 SPECIFIC:

PART#	QTY	DESCRIPTION	REFERENCE DESIGNATOR(S)	CRITICAL	BOM OPTION
13180425	1	CAP,CER,COG,0.5PF,+/-0.05PF,25V,0201,MI-Q	C7120_RF	CRITICAL	D11

by kass

PMU: CONTROL AND CLOCKS

HW_REV_ID	R5505	R5501	REVISION
0.10V	887K	51.1K	DEV1
0.20V	422K	51.1K	DEV2
0.30V	255K	51.1K	DEV 2.1
0.40V	180K	51.1K	DEV 3
0.50V	124K	51.1K	T181
0.60V	102K	51.1K	PP/P1
0.70V	82.5K	51.1K	DEV4
0.80V	63.4K	51.1K	P2
0.90V	51.1K	51.1K	DEV5
1.00V	51.1K	63.4K	EVT
1.10V	51.1K	82.5K	EVT DOE
1.20V	50.0K	100K	EVT ALT/CARBON
1.30V	39.0K	100K	DEV6
1.40V	14.7K	51.1K	CARRIER
1.50V	40.2K	200K	DVT
1.60V	6.34K	51.1K	PVT

RESET AND CONTROL: PMU

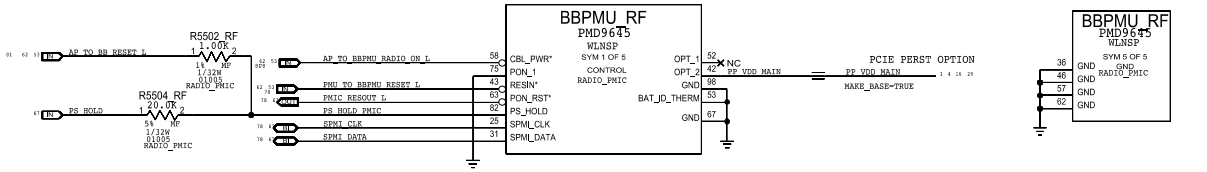

MPPS AND GPIOS: PMU

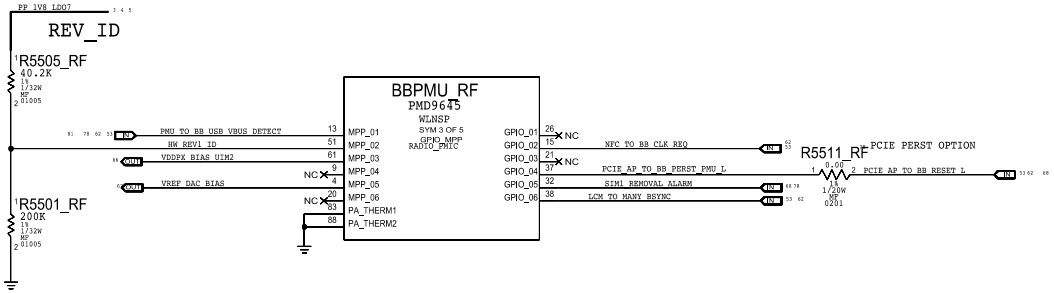

XTAL AND CLOCK: PMU

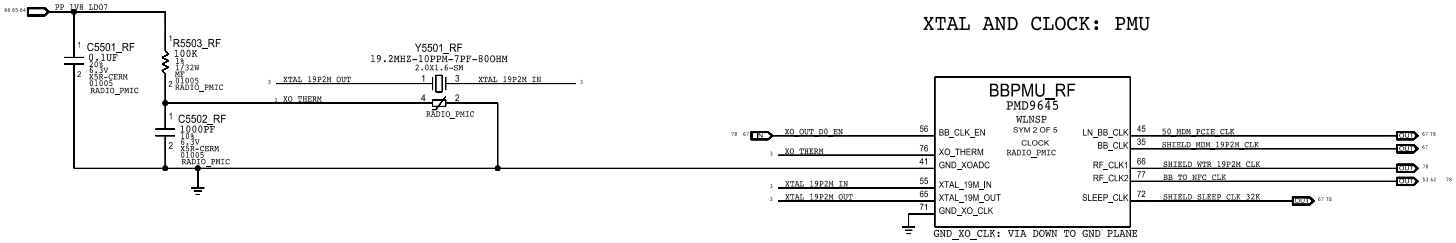

by kass

PMU: SWITCHERS AND LDOS

SWITCHERS BULK CAPS

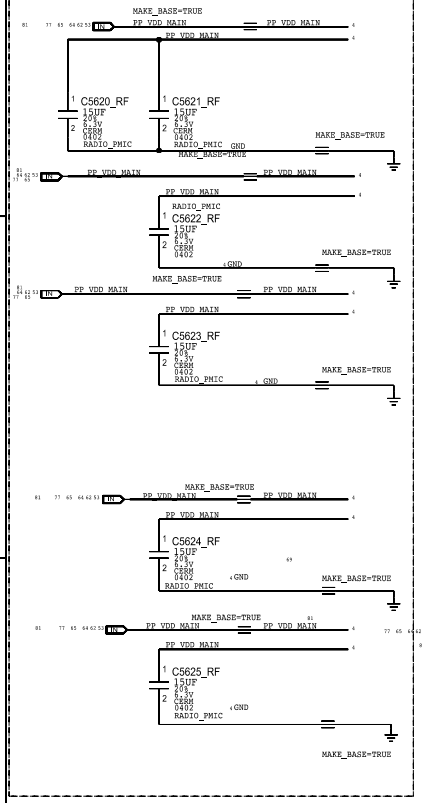

DESENSE CAPS

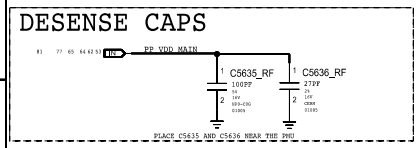

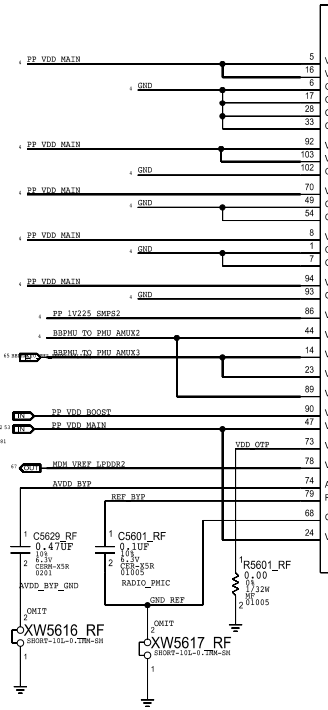

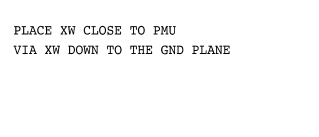

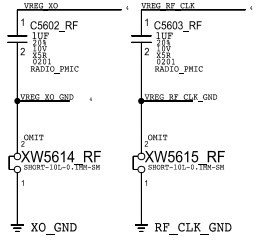

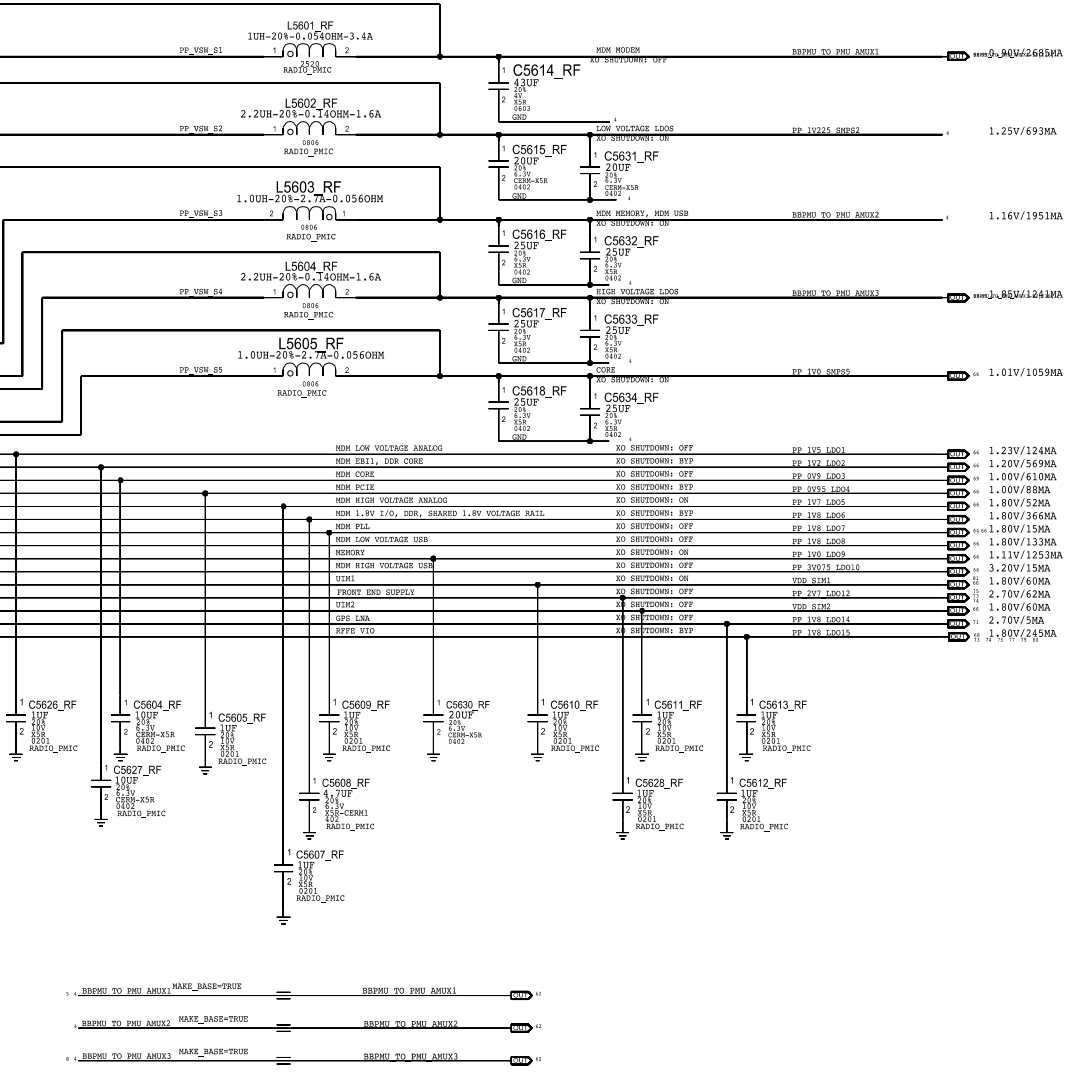

CONFIDENTIAL AND PROPRIETARY APPLE SYSTEM DESIGN. FOR REFERENCE PURPOSE ONLY - NOT A CHANGE REQUEST

by kass

BASEBAND: POWER

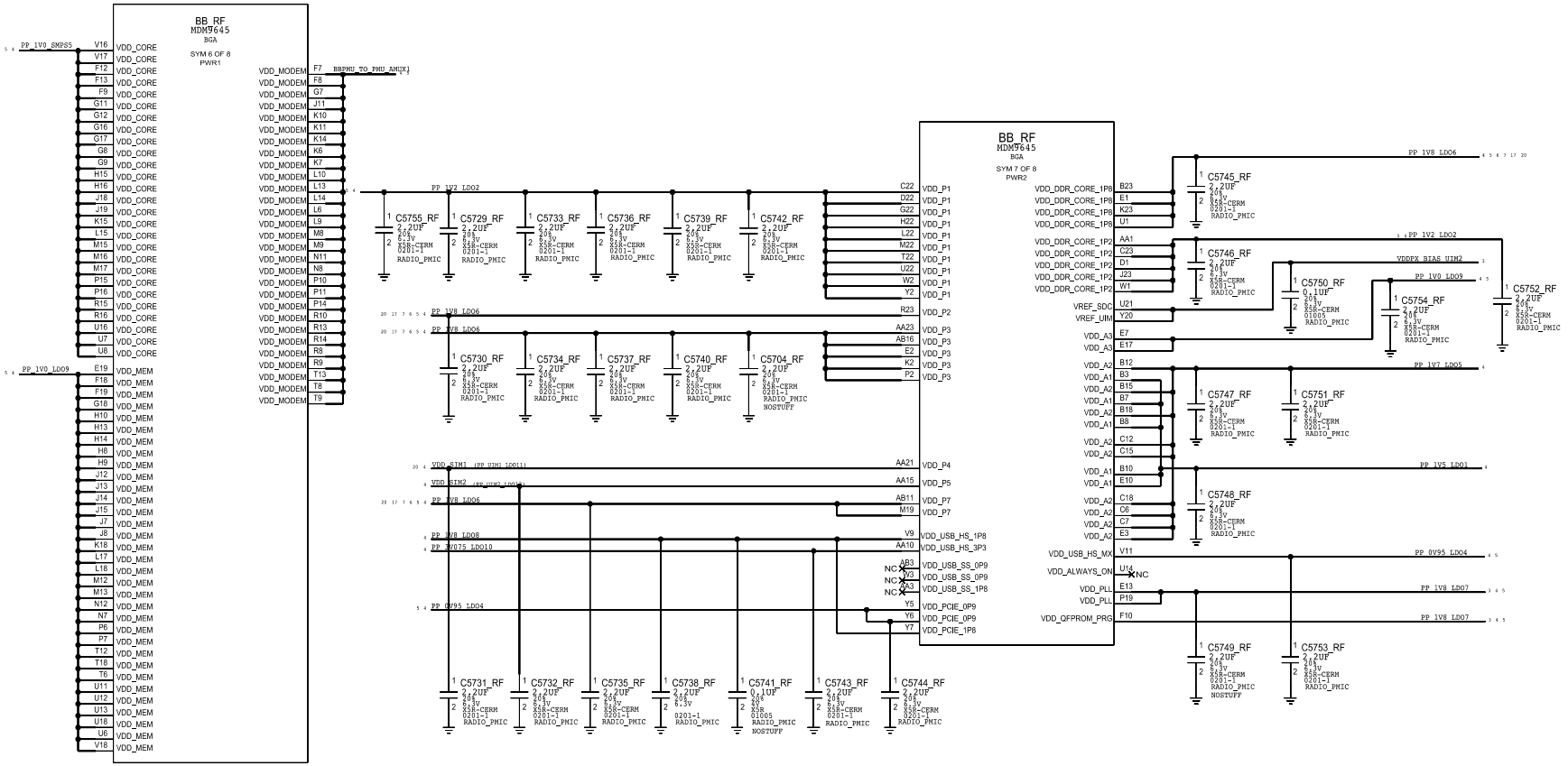

CONFIDENTIAL AND PROPRIETARY APPLE SYSTEM DESIGN. FOR REFERENCE PURPOSE ONLY - NOT A CHANGE REQUEST

by kass

BASEBAND: CONTROL AND INTERFACES

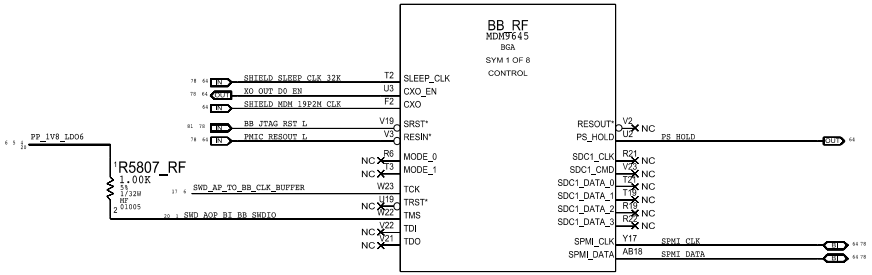

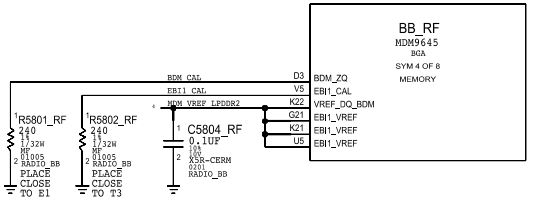

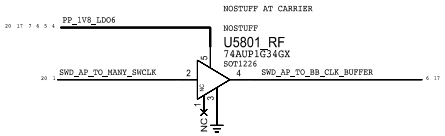

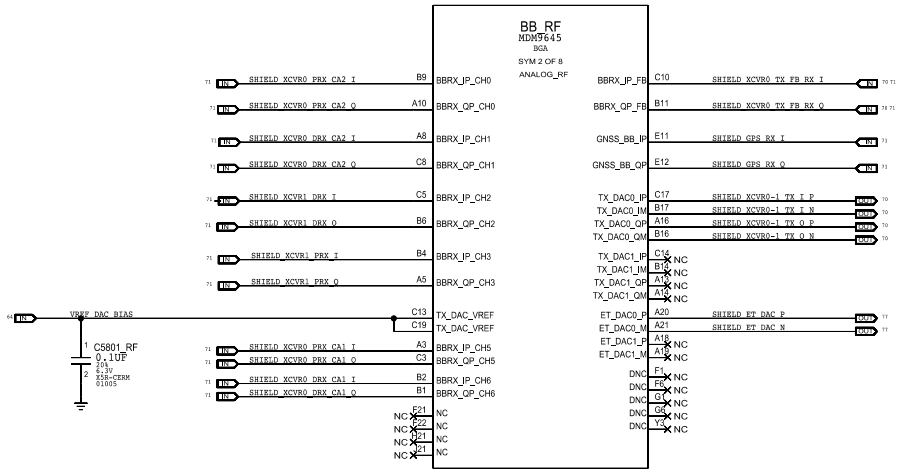

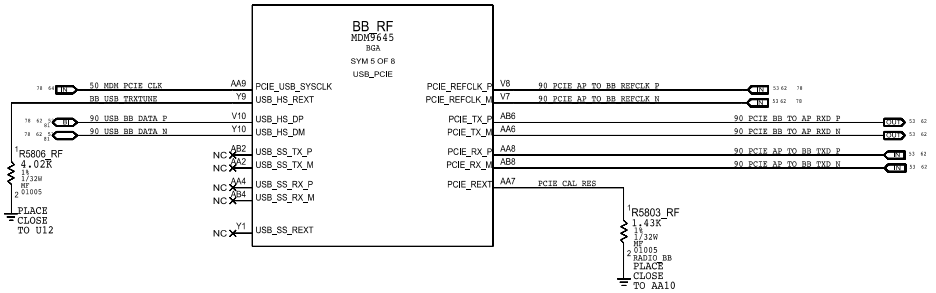

CONFIDENTIAL AND PROPRIETARY APPLE SYSTEM DESIGN. FOR REFERENCE PURPOSE ONLY - NOT A CHANGE REQUEST

by kass

BASEBAND: GPIOS

SKU	R5911_RF	R5912_RF
ROW	NOSTUFF	NOSTUFF
JP	1.0 KOHM	NOSTUFF

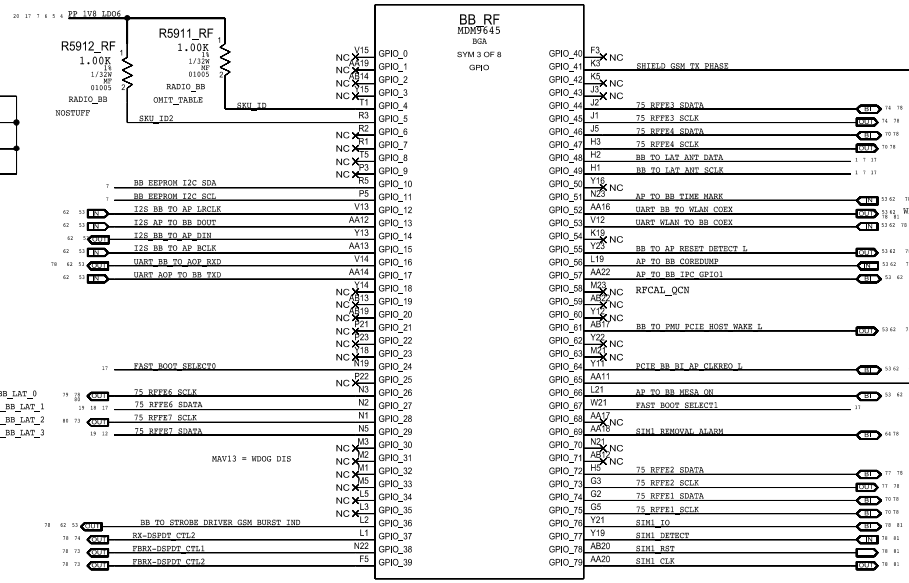

BUFFER ON RFFE5
SCLK/SDATA_A IS OUTPUT

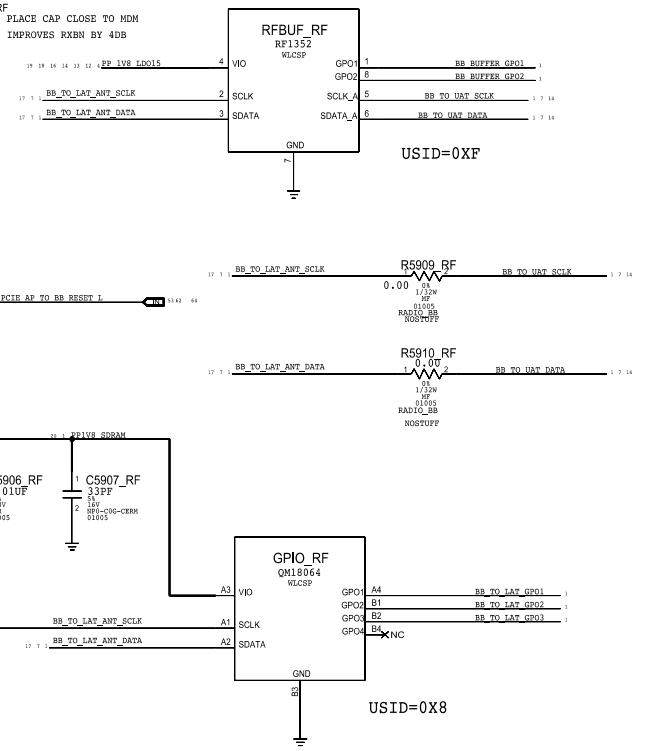

RFFE USAGE TABLE

RFFE1 WTR3925

RFFE2 QFE3100

RFFE3 DIV MODULES

RFFE4 WTR4905

RFFE5 TUNERS + ELNAS

RFFE6 2G PA,MLB PA,MB/HB TDD PA,MB/HB FDD PA

RFFE7 LB PA, COUPLERS

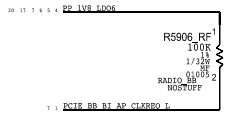

PCIE PULL-UPS TO BB RAIL

BB EEPROM

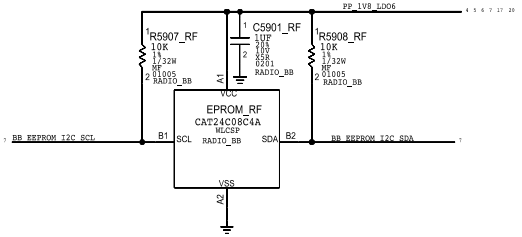

CONFIDENTIAL AND PROPRIETARY APPLE SYSTEM DESIGN. FOR REFERENCE PURPOSE ONLY - NOT A CHANGE REQUEST

by kass

TRANSCEIVER: POWER

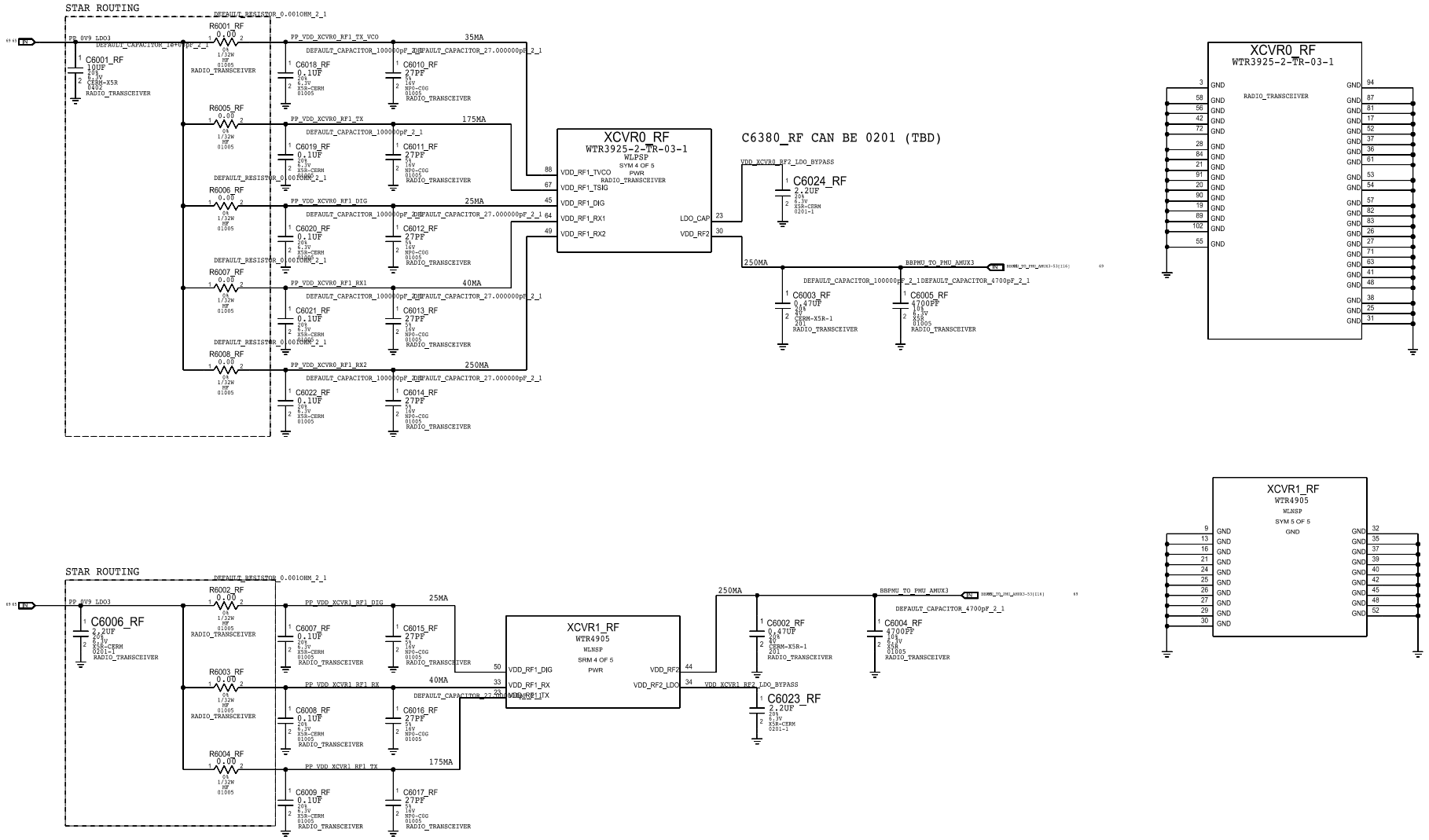

CONFIDENTIAL AND PROPRIETARY APPLE SYSTEM DESIGN. FOR REFERENCE PURPOSE ONLY - NOT A CHANGE REQUEST

by kass

TRANSCEIVER: TX PORTS

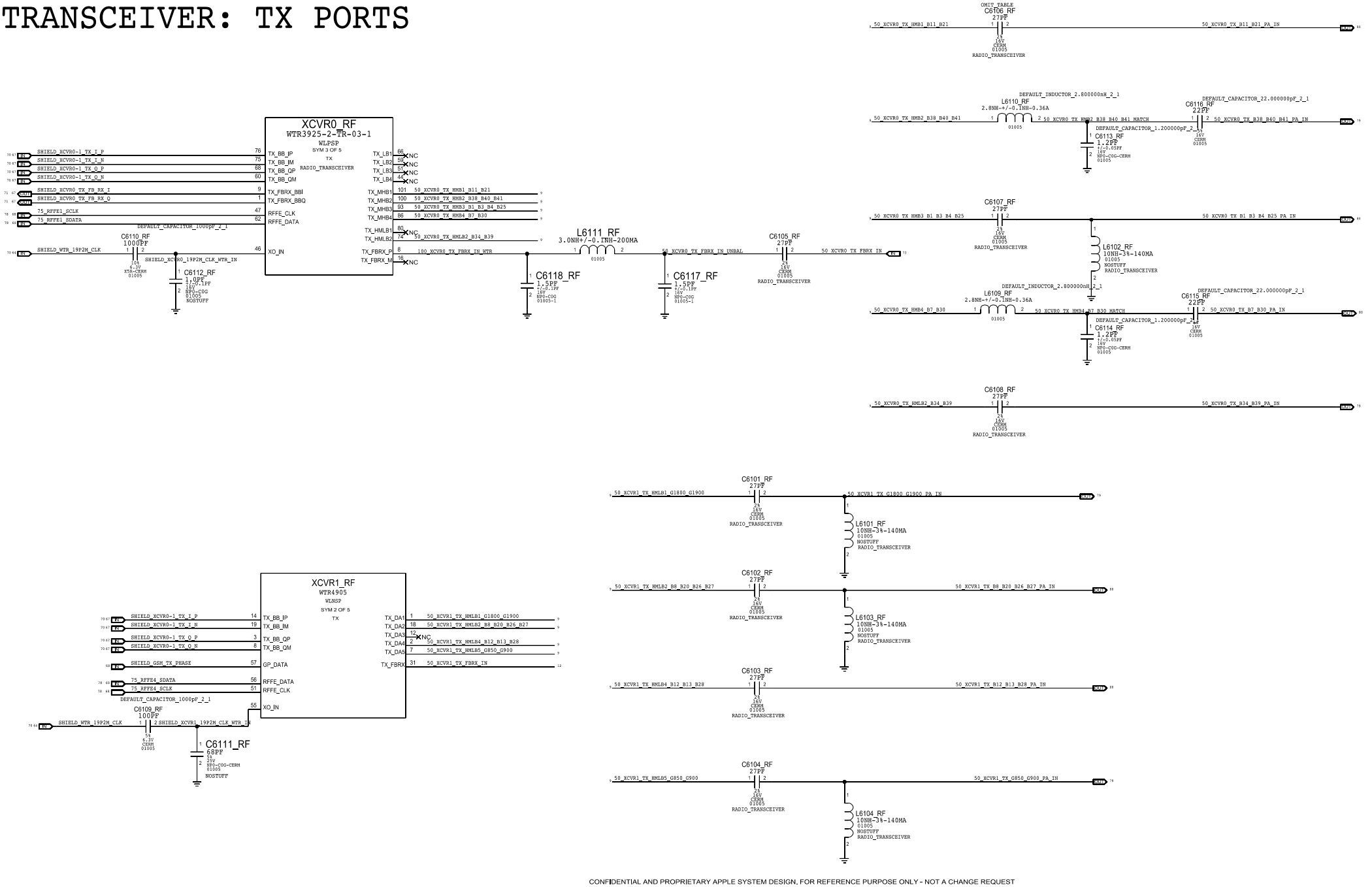

CONFIDENTIAL AND PROPRIETARY APPLE SYSTEM DESIGN. FOR REFERENCE PURPOSE ONLY - NOT A CHANGE REQUEST

by kass

TRANSCEIVER: PRX, DRX, & GPS PORTS

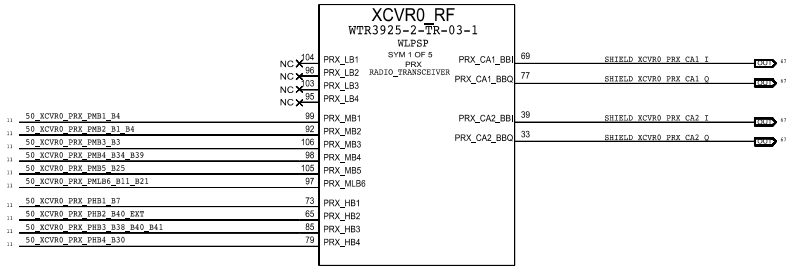

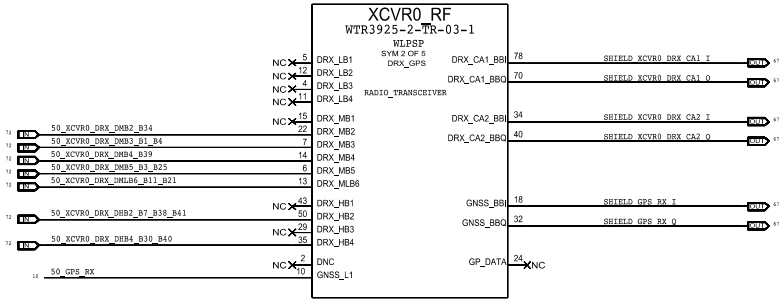

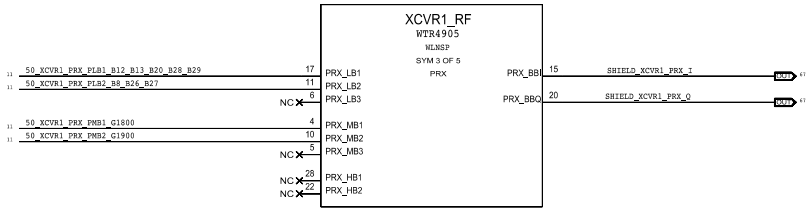

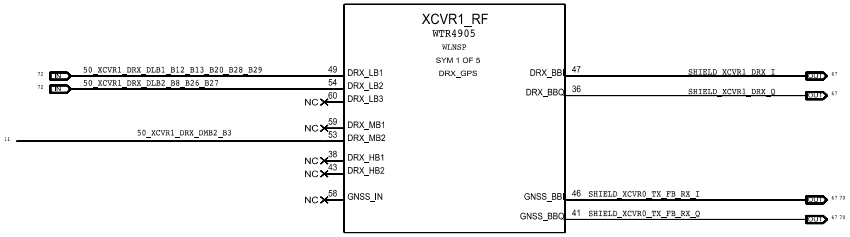

GPS FILTER

PLACE NEAR U_WTR

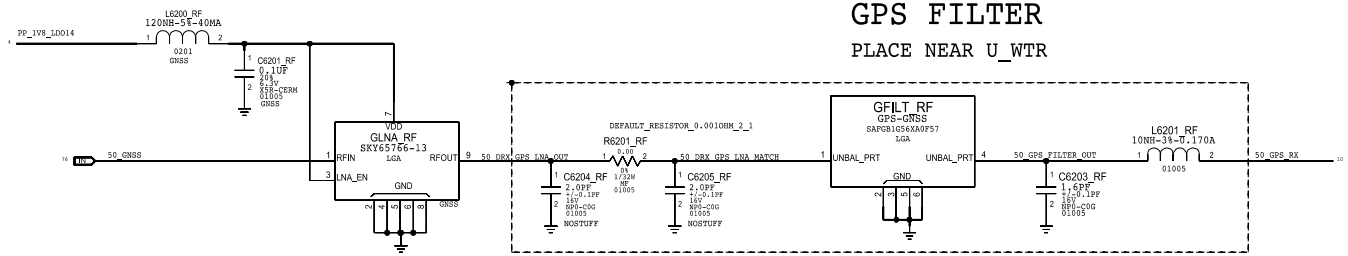

CONFIDENTIAL AND PROPRIETARY APPLE SYSTEM DESIGN. FOR REFERENCE PURPOSE ONLY - NOT A CHANGE REQUEST

by kass

PRIMARY & DIVERSITY RECEIVE MATCHING

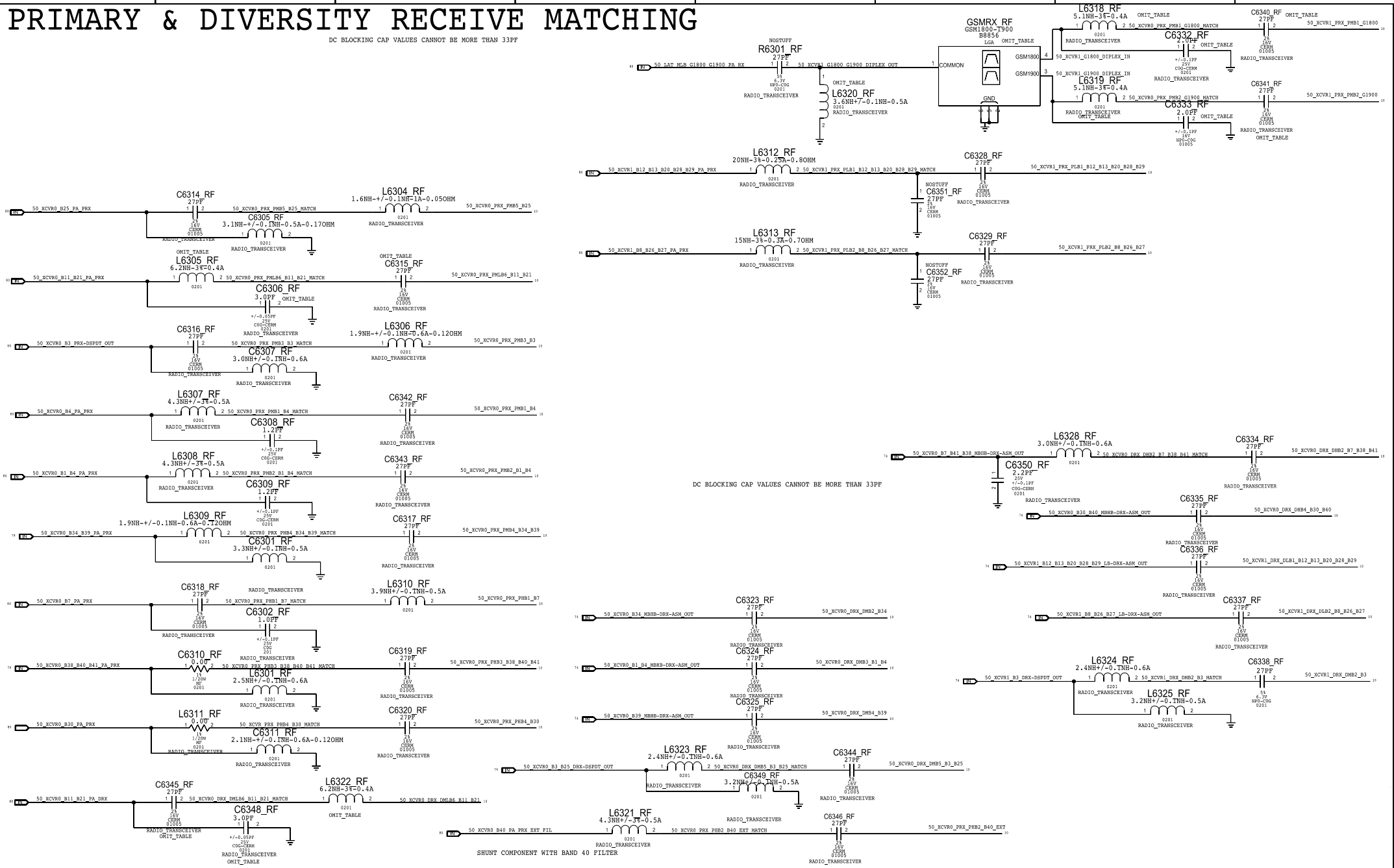

CONFIDENTIAL AND PROPRIETARY APPLE SYSTEM DESIGN. FOR REFERENCE PURPOSE ONLY - NOT A CHANGE REQUEST

by kass

LOWER ANTENNA AND COUPLER

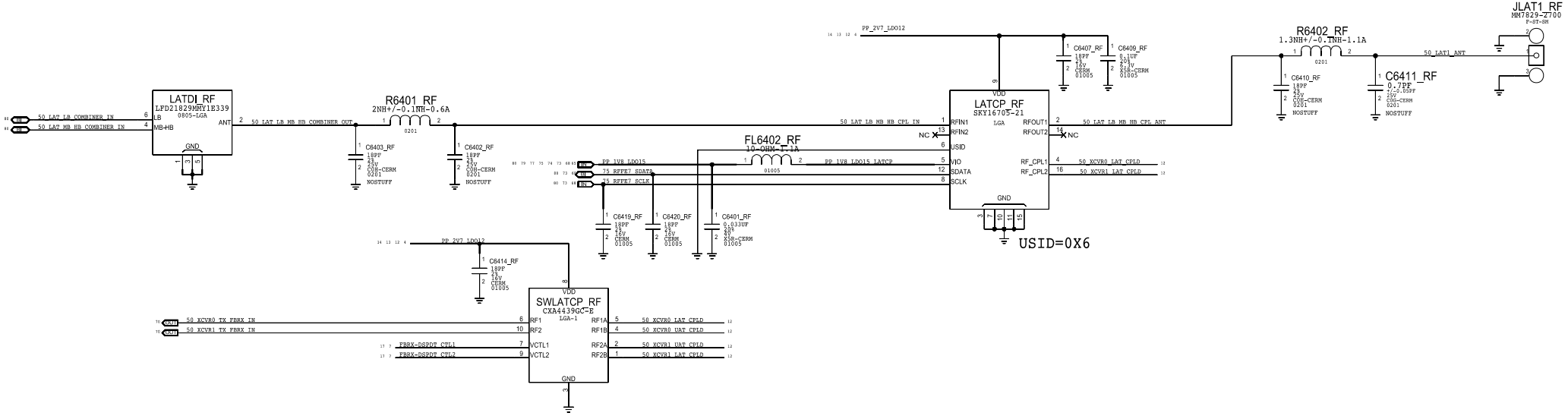

UPPER ANTENNA COUPLER

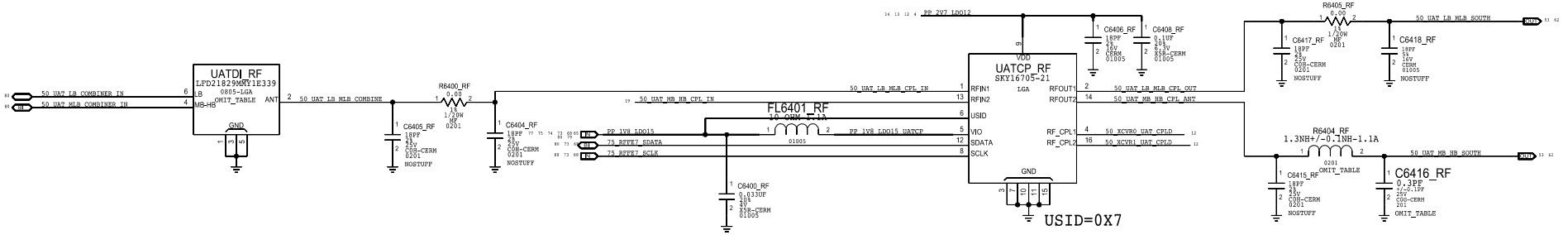

by kass

DIVERSITY RECEIVE

LB DRX ASM

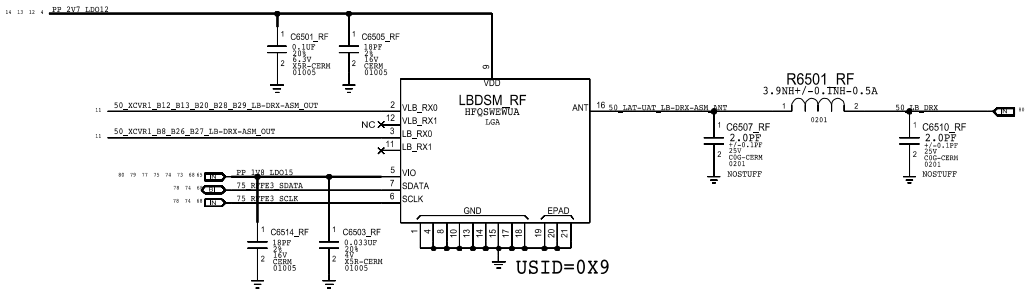

MB HB DRX ASM

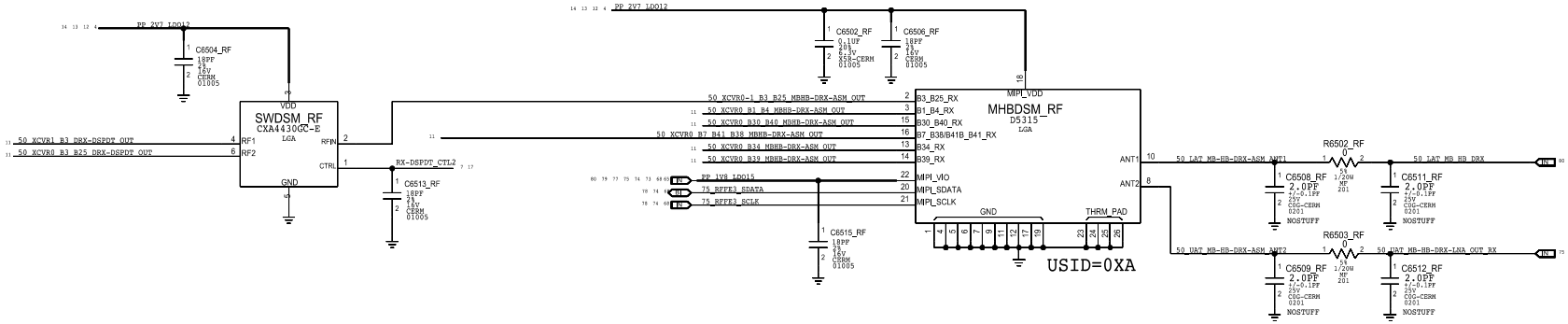

by kass

DIVERSITY RECEIVE LNAS

LB DRX LNA

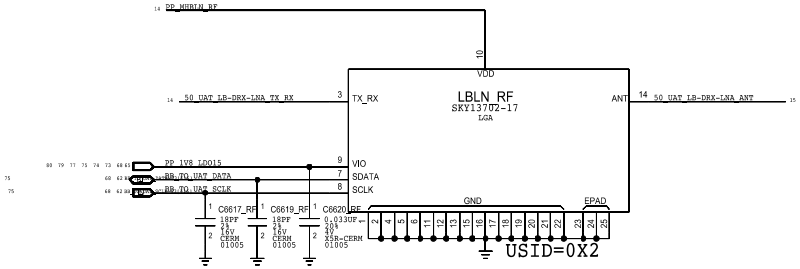

MB/HB DRX LNA

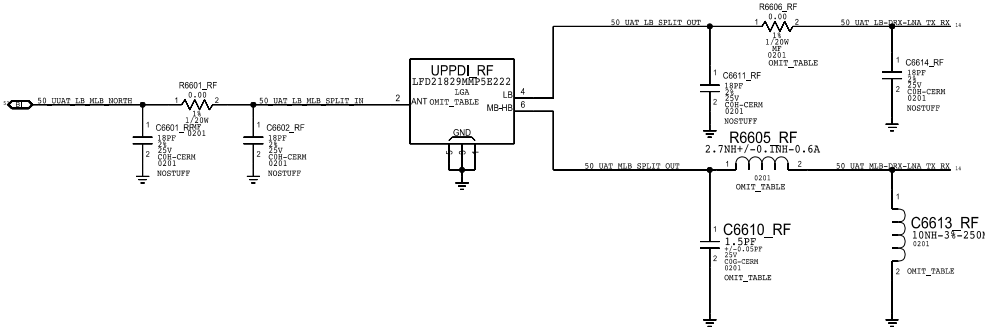

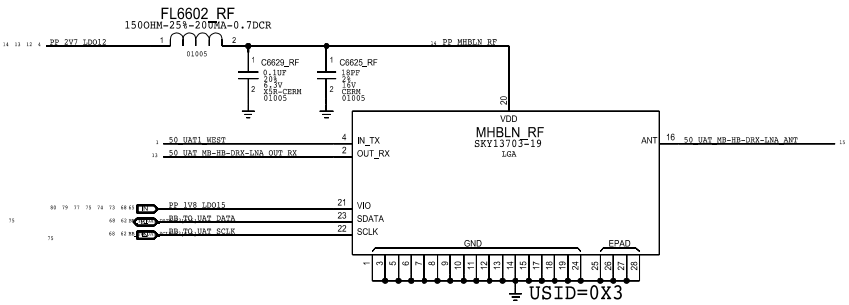

MLB DRX LNA

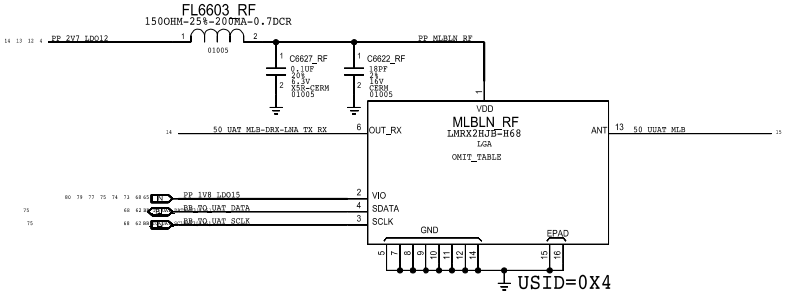

by kass

UPPER ANTENNA FEEDS

UAT1

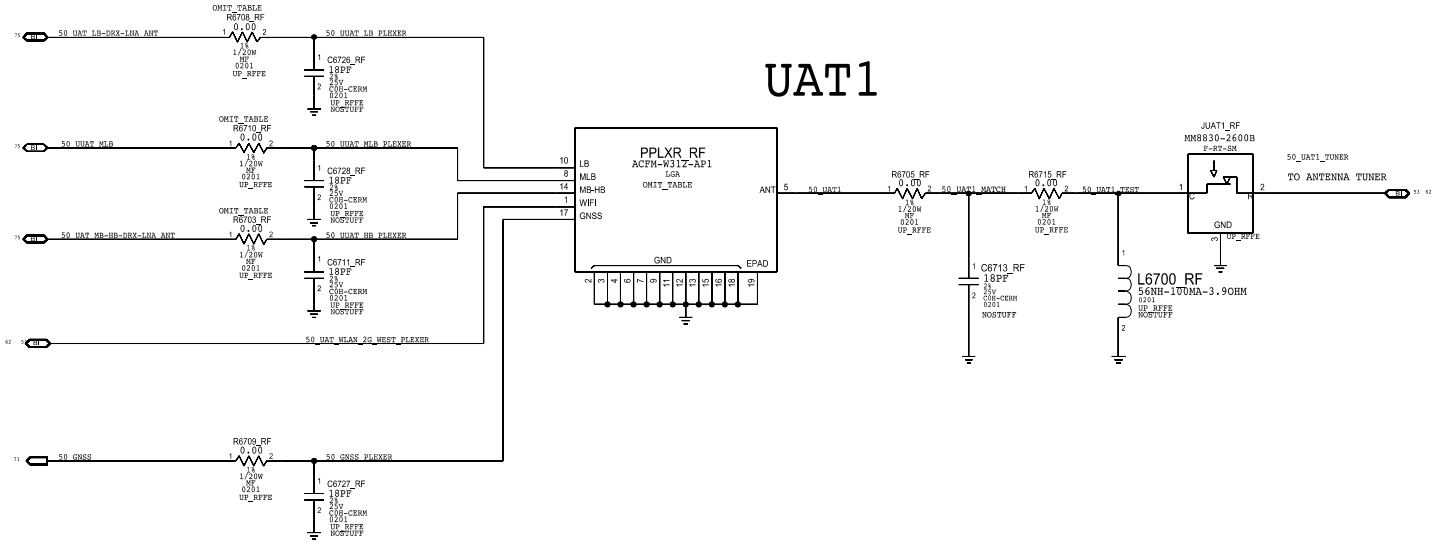

by kass

PMU: ET MODULATOR

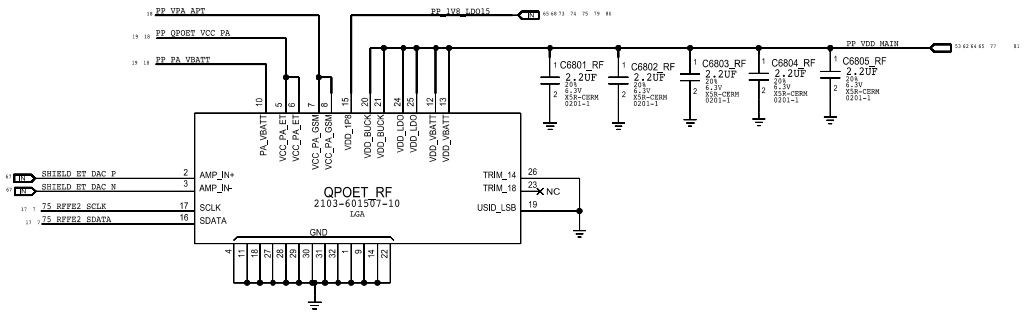

DESENSE CAPS

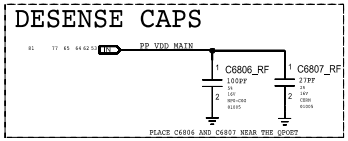

CONFIDENTIAL AND PROPRIETARY APPLE SYSTEM DESIGN. FOR REFERENCE PURPOSE ONLY - NOT A CHANGE REQUEST

by kass

MLB TEST POINTS

BASEBAND

PP7000_RF — P2MM-NSM — SM — PAD 1 — 75_RFFE1_SDATA — OMIT
PP6952_RF — P2MM-NSM — SM — PAD 1 — 75_RFFE1_SCLK — OMIT
PP6943_RF — P2MM-NSM — SM — PAD 1 — 75_RFFE2_SDATA — OMIT
PP6944_RF — P2MM-NSM — SM — PAD 1 — 75_RFFE2_SCLK — OMIT
PP6939_RF — P2MM-NSM — SM — PAD 1 — 75_RFFE3_SDATA — OMIT
PP6940_RF — P2MM-NSM — SM — PAD 1 — 75_RFFE3_SCLK — OMIT
PP6941_RF — P2MM-NSM — SM — PAD 1 — 75_RFFE4_SDATA — OMIT
PP6942_RF — P2MM-NSM — SM — PAD 1 — 75_RFFE4_SCLK — OMIT
PP6903_RF — P2MM-NSM — SM — PAD 1 — BB_TO_LAT_ANT_DATA — OMIT
PP6904_RF — P2MM-NSM — SM — PAD 1 — BB_TO_LAT_ANT_SCLK — OMIT
PP6935_RF — P2MM-NSM — SM — PAD 1 — 75_RFFE6_SCLK — OMIT
PP6936_RF — P2MM-NSM — SM — PAD 1 — 75_RFFE6_SDATA — OMIT

PP6906_RF — P2MM-NSM — SM — PAD 1 — SWD_AP_TO_BB_CLK_BUFFER — OMIT
PP6907_RF — P2MM-NSM — SM — PAD 1 — PMU_TO_BB_USB_VBUS_DETECT — OMIT
PP6908_RF — P2MM-NSM — SM — PAD 1 — NFC_TO_BB_CLK_REQ — OMIT
PP6909_RF — P2MM-NSM — SM — PAD 1 — SIM1_REMOVAL_ALARM — OMIT
PP6911_RF — P2MM-NSM — SM — PAD 1 — 50_MDM_PCIE_CLK — OMIT
PP6912_RF — P2MM-NSM — SM — PAD 1 — XO_OUT_D0_EN — OMIT
PP6913_RF — P2MM-NSM — SM — PAD 1 — BB_TO_NFC_CLK — OMIT
PP6914_RF — P2MM-NSM — SM — PAD 1 — SHIELD_SLEEP_CLK_32K — OMIT
PP6933_RF — P2MM-NSM — SM — PAD 1 — BB_TO_STROBE_DRIVER_GSM_BURST_IND — OMIT
PP6917_RF — P2MM-NSM — SM — PAD 1 — UART_BB_TO_WLAN_COEX — OMIT
PP6918_RF — P2MM-NSM — SM — PAD 1 — UART_WLAN_TO_BB_COEX — OMIT

PP6919_RF — P2MM-NSM — SM — PAD 1 — BB_JTAG_RST_L — OMIT
PP6920_RF — P2MM-NSM — SM — PAD 1 — FBRX-DSPDT_CTL1 — OMIT
PP6921_RF — P2MM-NSM — SM — PAD 1 — FBRX-DSPDT_CTL2 — OMIT
PP6923_RF — P2MM-NSM — SM — PAD 1 — BB_TO_PMU_PCIE_HOST_WAKE_L — OMIT
PP6924_RF — P2MM-NSM — SM — PAD 1 — SPMI_CLK — OMIT
PP6925_RF — P2MM-NSM — SM — PAD 1 — SPMI_DATA — OMIT
PP6926_RF — P2MM-NSM — SM — PAD 1 — UART_BB_TO_AOP_RXD — OMIT
PP6929_RF — P2MM-NSM — SM — PAD 1 — AP_TO_BB_TIME_MARK — OMIT
PP6930_RF — P2MM-NSM — SM — PAD 1 — BB_TO_AP_RESET_DETECT_L — OMIT
PP6931_RF — P2MM-NSM — SM — PAD 1 — AP_TO_BB_COREDUMP — OMIT
PP6938_RF — P2MM-NSM — SM — PAD 1 — RX-DSPDT_CTL2 — OMIT

PCIE

PP6915_RF — P2MM-NSM — SM — PAD 1 — 90_PCIE_AP_TO_BB_REFCLK_P — OMIT
PP6916_RF — P2MM-NSM — SM — PAD 1 — 90_PCIE_AP_TO_BB_REFCLK_N — OMIT

PCIE GND

PP6970_RF — P2MM-NSM — SM — PAD 1 — OMIT
PP6971_RF — P2MM-NSM — SM — PAD 1 — OMIT

BBPMU

PP6945_RF — P2MM-NSM — SM — PAD 1 — PMIC_RESOUT_L — OMIT
PP6905_RF — P2MM-NSM — SM — PAD 1 — AP_TO_BBPMU_RADIO_ON_L — OMIT
PP6900_RF — P2MM-NSM — SM — PAD 1 — PMU_TO_BBPMU_RESET_L — OMIT

SIM

PP6953_RF — P2MM-NSM — SM — PAD 1 — SIM1_IO — OMIT
PP6969_RF — P2MM-NSM — SM — PAD 1 — SIM1_DETECT — OMIT
PP6972_RF — P2MM-NSM — SM — PAD 1 — SIM1_RST — OMIT
PP6973_RF — P2MM-NSM — SM — PAD 1 — SIM1_CLK — OMIT
PP6974_RF — P2MM-NSM — SM — PAD 1 — 90_USB_BB_DATA_P — OMIT
PP6977_RF — P2MM-NSM — SM — PAD 1 — 90_USB_BB_DATA_N — OMIT

BOOT CONFIG

DEFAULT FAST_BOOT[2:0]
USB = 0X2

PP_1V8_LDO6
R6921_RF — 10K — 1% — 1/32W — MF — 01005 — RADIO_DEBUG — NOSTUFF
R6922_RF — 10K — 1% — 1/32W — MF — 01005 — RADIO_DEBUG
FAST_BOOT_SELECT1
FAST_BOOT_SELECT0

ICEFALL

PP6978_RF — P2MM-NSM — SM — PAD 1 — AP_TO_ICEFALL_FW_DWLD_REQ — OMIT
PP6979_RF — P2MM-NSM — SM — PAD 1 — SIM1_SWP — OMIT
PP6980_RF — P2MM-NSM — SM — PAD 1 — SE2_SWP — OMIT
PP6981_RF — P2MM-NSM — SM — PAD 1 — ICEFALL_LDO_ENABLE — OMIT
PP7500_RF — P2MM-NSM — SM — PAD 1 — SE2_READY — OMIT
PP7501_RF — P2MM-NSM — SM — PAD 1 — NFC_SWP_MUX — OMIT
PP7502_RF — P2MM-NSM — SM — PAD 1 — SE2_PMR_REQ — OMIT

by kass

TDD TRANSMIT

2G PA

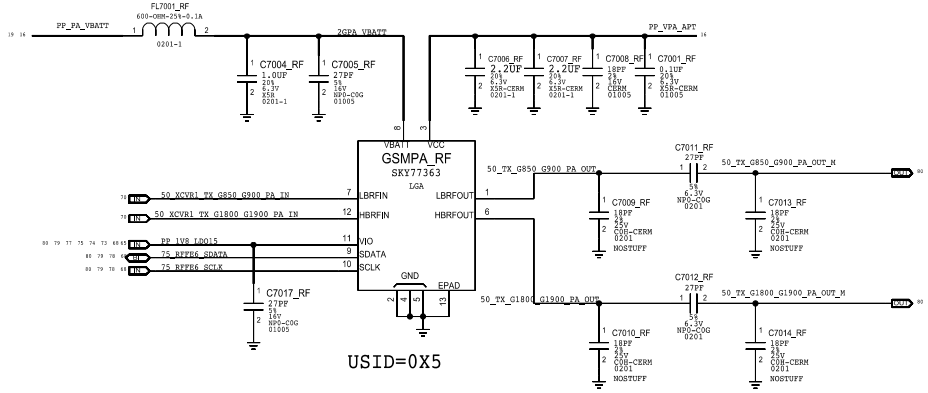

USID=0X5

MB HB TDD PA

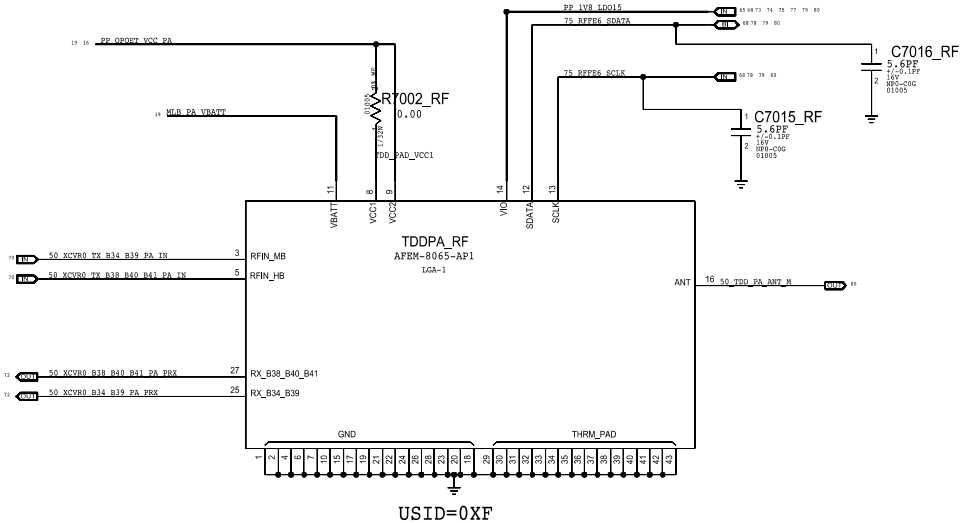

USID=0XF

by kass

FDD TRANSMIT

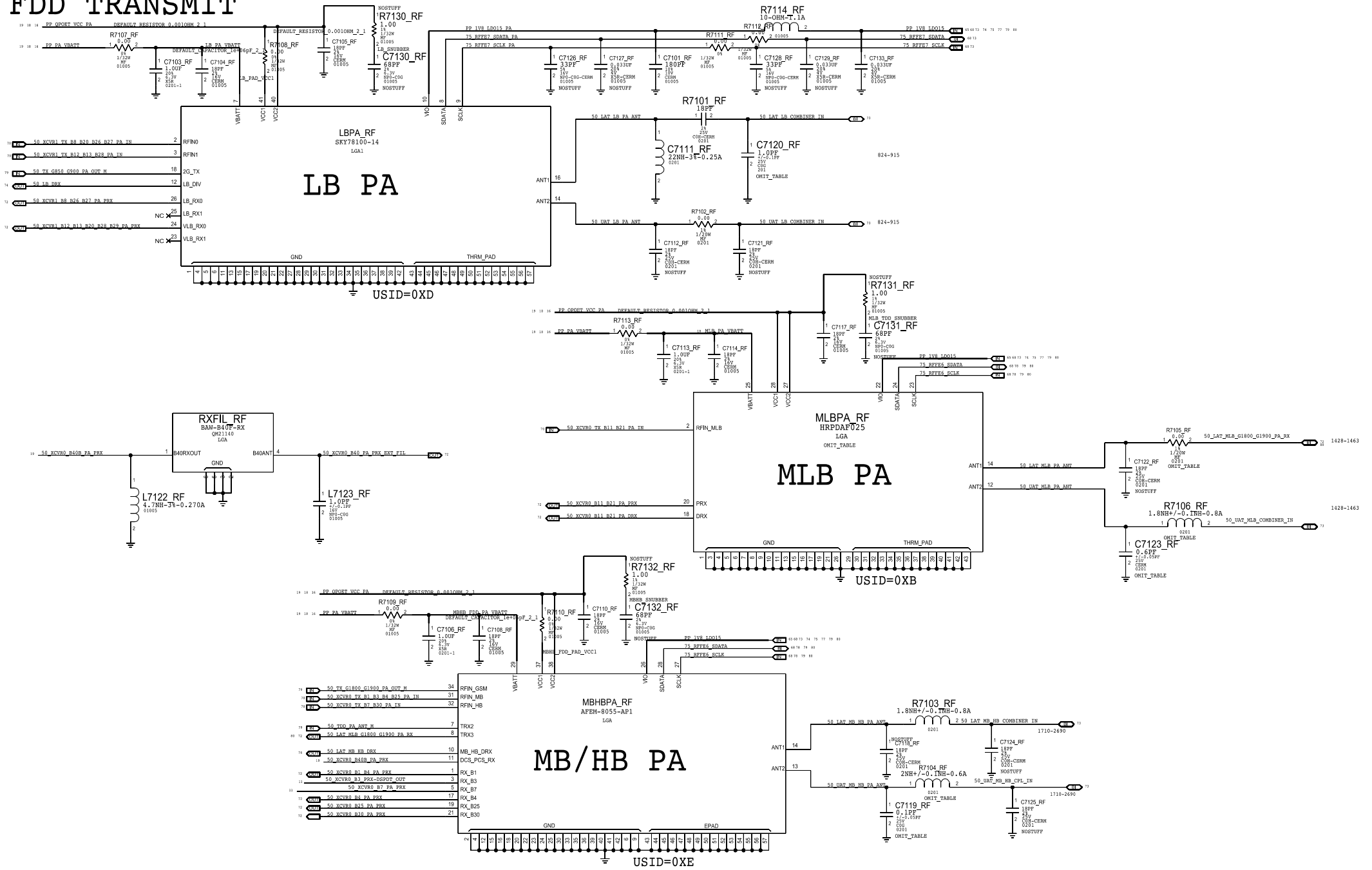

by kass

ICEFALL

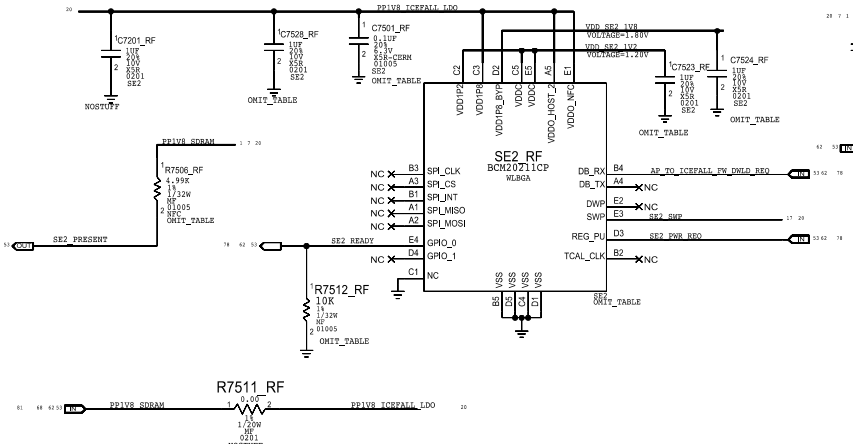

SWP MUX

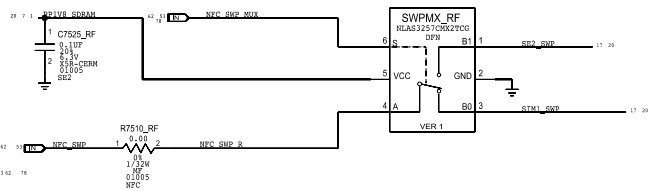

ICEFALL LDO

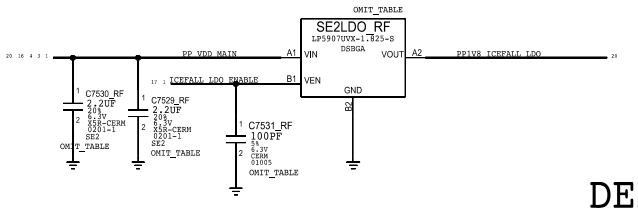

SIM CARD CONNECTOR

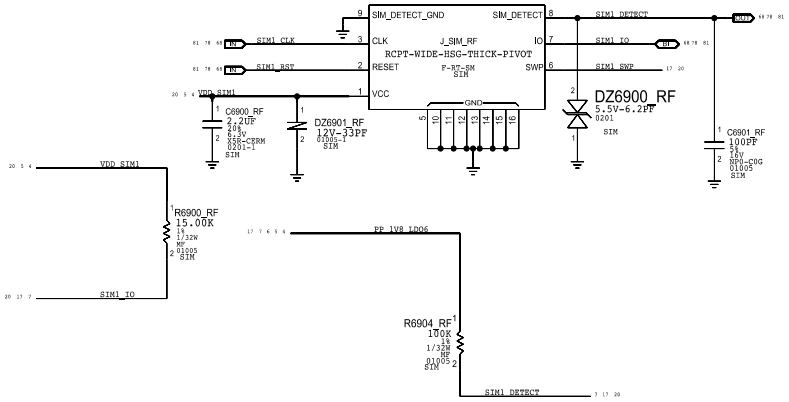

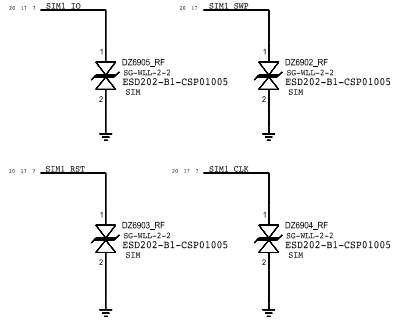

DEBUG CONNECTOR

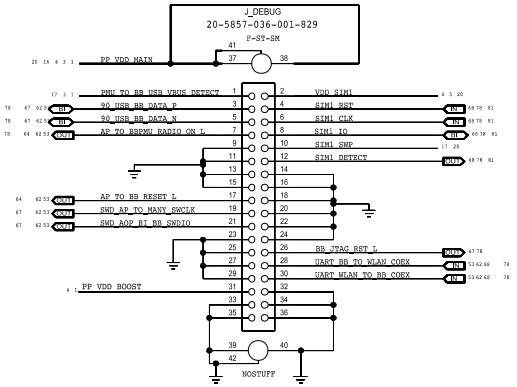

by kass